Engineering Handbook

Standard Amplifier Edition 1

BS Servo X Series

TOSHIBA MACHINE

VELCONIC®

BS Servo X Series

Engineering Handbook

Standard Amplifier

PREFACE

This manual describes the method of handling and functions of the BS servo X series positioner, and cautions on safety use.
Improper handling may lead to unexpected troubles or serious results. Before the use, be sure to read through this Engineering Handbook (Standard Amplifier Edition).
The contents in this manual may subject to change without prior notice to effect improvements.

REQUEST

Keep this manual at a place where this manual can be referred to any time.

TOSHIBA MACHINE CO., LTD.

CAUTIONS ON SAFETY

Before using this equipment, make sure that you well understand the structure and functions of this positioner, safety information and cautions to be observed. After reading this manual, be sure to keep it at a place where it can be referred to any time.

Meaning of "DANGER" and "CAUTION" Signs

In this manual, safety cautions are classified into "DANGER" and "CAUITION" to indicate the extent of warning.

⚠ DANGER — This means that "incorrect handling will lead to fatalities or serious injuries".

⚠ CAUTION — This means that "incorrect handling may lead to personal injuries (i.e., injuries, burns and electric shocks, etc., which do not require hospitalization or long-term medial treatment or physical damage (i.e., damages due to destruction of assets or resources)".

Meaning of "PROHIBITED" and "MANDATORY" Symbols

This means that the action is prohibited (must not be done).

For "Fire Prohibited", for instance, it is indicated by

This means that the action is mandatory (must be done).

For "Grounding", for instance, it is indicated by

If trouble has occurred

If a trouble such as abnormal noise, nasty smell or smoke is caused during operation, immediately turn off the power and call us for repairs at Toei Electric Service Center or Toshiba Machine agent in your territory.

Toei Electric After-Sale Service Center
Matsumoto 131, Mishima City, Shizuoka Pref.
411–8510, JAPAN
Phone: +81–55–977–0129 Fax: +81–55–977–3744

General

⚠ DANGER

1.Transport, installation, wiring, operation, inspection and maintenance should be performed by qualified personnel well versed in the equipment. Otherwise, an electric shock, injury or fire may be caused.

2.NEVER touch the amplifier interior by hand. Otherwise, you may get an electric shock.

3.Be sure to ground each grounding terminal of the amplifier and motor. Otherwise, you may get an electric shock.

4.Perform wiring and inspection more than ten (10) minutes after the power is turned off and after you have confirmed the charge lamp OFF condition and voltage. Otherwise, you may get an electric shock.

5. More than one disconnect switch may be required to deenergize the equipment before servicing. Otherwise, you may get an electric shock.

6.DO NOT cut the cable, stretch it excessively, exert a heavy load on it or overtwist it. Otherwise, you may get an electric shock.

7.NEVER use the equipment at a place where it is exposed to water splash, in a corrosive atmosphere, in an atmosphere containing inflammable gas or metal chip, or near combustibles. Otherwise, a fire or equipment failure may be caused.

8.NEVER change this equipment. Otherwise, an electric shock, fire, injury or malfunction may be caused.

1. NEVER approach or contact the motor revolving part (such as shaft) during operation. Otherwise, you may be caught in the motor and injured seriously.

⚠ CAUTION

1.Use a specified combination of motor and amplifier.
Otherwise, a fire or malfunction may be caused.

2.Take careful precautions on the temperature of the amplifier, motor and peripheral equipment, because the temperature of them will rise to cause a fire.

1.NEVER touch the amplifier radiator, reverse-current absorption resistor or motor for some time after the power is turned off, or during their excitation. Otherwise, you may get burnt

Transport

⚠ CAUTION

1. DO NOT hold the cable and motor shaft during transport.
Otherwise, the equipment may malfunction, or you may get injured**.**

1.Overloading of products may cause a collapse of them during transport. To avoid this, observe the instructions given on them. Otherwise, the equipment may malfunction, or you may get injured.

2.Confirm the mass of the product by referring to the external view drawing, catalog, etc., and carry the product properly according to its mass. Otherwise, the equipment may malfunction, or you may get injured.

3.The motor eyebolt should be used only when it is transported. NEVER use it for transporting the machine. Otherwise, the equipment may malfunction, or you may get injured.

Installation

⚠ CAUTION

1. Make sure that the product you have received is exactly the one you ordered. If a different product is installed, you may get injured, or the equipment may be damaged.
2. DO NOT block the suction or exhaust port of the servo motor with a cooling fan. Otherwise, a fire or motor failure may be caused.
3. Make sure that the output power and mass of the motor you are going to install are appropriate. Otherwise, you may get injured, or the equipment may malfunction.
4. NEVER touch the keyway on the motor shaft end by bare hand. Otherwise, you may get injured.
5. DO NOT drop the product or impose a heavy impact on it. Otherwise, you may get injured, or the equipment may malfunction.
6. When combining the motor with a load, take careful precautions on center alignment, parallelism of the belt stretching pulleys, etc. The motor cannot be connected directly with the load. Otherwise, you may get injured.
7. DO NOT exert on the motor shaft a load larger than the allowable load. Otherwise, the shaft may be broken, or you may get injured.
8. DO NOT ride on the equipment or exert a heavy load on it. Otherwise, you may get injured.
9. Strictly observe the set direction of the equipment. Otherwise, the equipment may malfunction.
10. Keep the specified clearance between the equipment, control panel interior and other equipment. Otherwise, a fire or equipment failure may be caused.

1. DO NOT block the suction or exhaust port or allow entry of contaminant. Otherwise, a fire may be caused.

Wiring

⚠ CAUTION

1. Electric work should be done only by qualified electric personnel. Otherwise, a fire or electric shock may be caused.
2. Perform wiring properly. Otherwise, the motor may run uncontrollable, or you may get injured.
3. DO NOT connect a commercial power supply directly with the servo motor. Otherwise, the motor may malfunction.
4. Provide an emergency stop switch on the outside so that you can immediately stop the operation and turn off the power. Otherwise, you may get injured.
5. Tighten the terminal block screws with specified clamping torque. Otherwise, a fire may be caused.
6. Make sure that the input master power voltage falls under the rated value. Otherwise, a fire or failure may be caused.
7. DO NOT pass the motor drive line and signal line in the same duct, or bundle them. To connect the motor sensor, use an exclusive cable.
8. When connecting a battery, take careful precautions on the polarity. If the polarity is wrong, equipment damage or rupture may be caused.

1. Be sure to ground the grounding terminal (E), using an electric wire. Otherwise, a fire or electric shock may be caused.

Operation

⚠ CAUTION

1.NEVER adjust or change the equipment excessively.
Otherwise, the operation will be unstable and you may get injured.
2.Perform a test run to confirm the operation with the motor secured and disconnected from the machine.Then mount the motor on the machine. Otherwise, you may get injured.
3.The holding brake will not serve as a stop device to assure the machine safety. Provide a stop device on the machine side to assure safety. Otherwise, you may get injured.
4.At alarm generation, remove the cause of the trouble, reset the alarm after assuring safety, and resume the operation. Otherwise, you may get injured.
5.After the power supply is restored following momentary power failure, DO NOT approach the machine because it may restart suddenly. Otherwise, you may get injured..

1.Provide an emergency stop circuit on the outside so that you can immediately stop the operation and turn off the power. Otherwise, you may get injured.
2.Before rotating the motor alone, remove the key which is set temporarily to the output shaft. Otherwise, it will fly out and you may get injured.
3.Use a specified combination of motor and amplifier. Set the legal motor code for the servo amplifier parameter. Otherwise, a fire or malfunction may be caused.
4.When using the servo motor for the vertical axis, provide a safety device (such as holding brake) to prevent drop of a workpiece due to alarm generation or axis overtravel.
5.Be sure to observe the allowable operation range of the motor (see the Motor Engineering Handbook, etc.). Otherwise, you may get injured, or the motor may malfunction.
6.During power ON or some time after power OFF, DO NOT touch the amplifier, regenerative resistor, motor, etc., by hand. The temperature of them may be high and you may get injured.

Inspection and Maintenance

⚠ CAUTION

1.DO NOT inspect the equipment by a person other than the qualified engineer. Otherwise, an electric shock may be caused.
2.DO NOT measure the insulation resistance of the controller, using a megger. Otherwise, the controller may malfunction.
3.DO NOT disassemble or repair the equipment. Otherwise, an electric shock, fire, injury or malfunction may be caused.
For repair, contact the shop where you bought the equipment, or Toei Electric After-Sale Service Center.

1. Perform regular inspection and maintenance. Otherwise, an abnormality or trouble may be overlooked, resulting in personal injury or equipment malfunction. It is recommended to perform the following inspection on a regular basis.
(1)Make sure that each terminal block screw is tightened completely. If loosened, tighten the screw completely.
(2)Make sure that no abnormal noise is caused from the servo motor bearing or brake unit.

(3)Make sure that all cables are not cut or scratched or not cracked. Especially, when the cable moves at operation, perform regular inspection according to the using conditions.
(4)Make sure that the load connecting shaft is correctly aligned.

2.DO NOT measure the insulation resistance of the controller, using a megger. Otherwise, the controller may malfunction.
3.When replacing the equipment with a new one, transfer the user's set data of the replaced equipment to the new equipment beforehand. Then restart the operation. Otherwise, the equipment may malfunction.
4.DO NOT change wiring during power ON. Otherwise, you may get an electric shock or injured.

Disposal

⚠ CAUTION

1. Scrap this equipment as a general industrial waste.

General Precautions

Be sure to observe the following precautions when using the equipment.

1. In some circumstances, illustrations included in this manual are drawn with the cover or safety shield disconnected, to explain the details. Before operating the equipment, be sure to set all covers and shields as they are set originally, and perform an operation according to this manual.
2. Illustrations and drawings carried in this manual are the representative examples and may differ from the actual equipment delivered to the customer.
3. This manual may be subject to change due to change in the specifications, etc.
4. Any product changed by the customer is excluded from our warranty. We shall not assume any responsibility for damages and injuries resulting from the changed product.

Applications of this equipment:

1. This equipment is not designed and manufactured to serve as a device or equipment used under serious conditions in which malfunction or trouble of this equipment will affect the human lives (i.e., for nuclear power, aerospace, traffic devices, medical appliances, various safety devices, etc.). When you wish to use this equipment for a special purpose, be sure to consult with us beforehand.
2. This equipment is manufactured under the strict quality control. When you wish to use the equipment in a facility where a serious accident or loss is expected due to its malfunction, be sure to equip safety devices.

EEP-ROM life:

1.The maximum number of writing counts to the EEP-ROM memorizing parameter set values is 100,000.
When the total counts of the following operations exceed 100,000, the EEP-ROM life will end and the servo amplifier may malfunction.
•Writing to EEP-ROM to change parameter set value, etc.
•Home point setting when an absolute position sensor system is used.

General Precautions

Warranty

Toshiba Machine agrees to repair or replace as necessary all defective material or workmanship without any charge incurred on the customer according to the following conditions.

1.Only the basic unit shall be covered by this Warranty.

2.If nonconformity is found in the equipment, which is attributable to Toshiba Machine, we will repair the equipment or replace it with an alternative equipment free of charge.
This Warranty and services shall be effected only when the equipment is used in Japan. When the equipment is exported and used overseas, separate consultation shall be held to decide the details.
Only the specifications and functions of the equipment, which are defined in the specifications manual, catalog, instruction manual and the like, shall be guaranteed. In no event, does Toshiba Machine's Guarantee cover the secondary compensation and any other compensations not defined in this Warranty.

3.The warranty period shall be one (1) year after delivery of the equipment. The specific parts (such as consumable parts and accessories) shall not be guaranteed, however. Unless the equipment is used immediately after the delivery, the warranty period shall be eighteen (18) months from the date of acceptance, which shall be effective, however, only when the equipment was sold via our agents.

4.Even during the warranty period, the following nonconformities and malfunctions shall be repaired with all expenses incurred on the customer.
[1]Malfunction caused by negligent handling and operation.
[2]Malfunction which was caused intentionally or negligently.
[3]Malfunction caused by the use under special conditions.
[4]Malfunction caused by a reason other than Toshiba Machine's product.
[5]Malfunction caused by insufficient maintenance and management.
[6]Malfunction caused by the change made on the product by the customer for customer's convenience.
[7]Malfunction caused by the repair done by other than Toshiba Machine or a company or factory specified by Toshiba Machine.
[8]Malfunction caused by the use of any part other than Toshiba Machine's designated parts.
[9]Nonconformity caused by fire, earthquake, flood, thunderbolt, acts of God, or any other causes beyond Toshiba Machine's control.
[10]Nonconformity caused by aged deterioration (natural fading of painted surface, plated surface, etc., and rust development on them).
[11]Use done by neglecting the precautions stipulated in the instruction manual, specifications manual and catalog.

5.On-site investigation of this equipment is possible on condition that the customer pays for all actual expenses incurred. When another contract of warranty exists, priority shall be given to this contract.

General Precautions

Life of servo amplifier:

The life of each part is tabled below, which will change according to the method of use, operating conditions, etc., however. If any nonconformity is found, the relevant part or parts should be replaced with new ones. For parts replacement, contact the After-Sale Service Center of Toei Electric.

Part name	Yardstick of life	Conditions
Smoothing capacitor (or condenser)	Five (5) years	When used under load of 70 % or less in air-conditioned normal operating conditions.
Relay	100,000 counts of use	
Cooling fan	10,000 ~ 30,000 hours (2 ~ 3 years)	
Battery for holding absolute position	See Section 7.	

(1)Smoothing capacitor
The characteristics of the smoothing capacity will deteriorate due to influence by ripple current, etc. The capacitor life is largely affected by the ambient temperature and operating conditions. When the capacitor is operated continuously in well air-conditioned normal operating conditions, its life will be five (5) years.

(2)Servo amplifier cooling fan
The bearing life of the cooling fan is 10,000 to 30,000 hours. When the bearing is operated continuously (∗1), it should be normally replaced together with the fan every two (2) to three (3) years. Additionally, even when abnormal noise or abnormal vibration is found at the time of inspection, it should be replaced.

(∗1) Because the cooling fan operates only when the fin temperature rises, the operating hours of the cooling fan varies with the ambient temperature and operating conditions.

Instructions for compliance with the Low Voltage Directive

Our view of Amplifier with CE mark Amplifier are covered by the Low Voltage Directive.

⚠ CAUTION

1. The grounding terminal is indicated by the mark ⏚ . Do not use an Earth Leakage Circuit Breaker as an electric shock protector without connecting the equipment to the earth. The wire of the size more than a power supply line should be used for a grounding line.
2. Use the breaker (MCCB), earth leakage circuit Breaker (ELCB), or magnetic contactor (MC) which conform to the EN or IEC Standard.
3. Where residual-current-operated protective device (RCD) is used for protection in case of direct or indirect contact, only RCD of Type B allowed on the supply side of the Electronic Equipment (EE).
4. Environment
   - Please use it in the environment of degree of contamination level 2.
   - Please use it on the following environmental conditions.

Environment	Conditions
Ambient temperature	0 ～ +55 ℃ (non-freezing)
Ambient humidity	35～90 %RH (non-condensing)
Storage temperature	-10 ～ +70 ℃ (non-freezing)
Storage humidity	35 ～ 90 %RH (non-condensing)
Altitude for installation	1,000 m or less
Atmosphere	Dust, metal chip, oil mist, corrosive gas or explosive gas should not be involved.
Vibration(*1) 008P2,012P2,025P2,035P3 070P3,100P3,200P3	Pursuant to IEC60068-2-6. Frequency 10 ～ 57 Hz One-way amplitude 0.075 mm Frequency 57 ～ 150 Hz Acceleration 9.8 m/s^2
Protective structure	IP10

(*1):Each amplifier is verified to run normally under the above specified conditions.

5. Recommends that the sensor cable be less than 30m long. If longer, pass it through conduit, and implement noise counter measures.
6. When you use the power supply for an interface, please use insulated type DC24V power supply of CE mark conformity article or EN standard (EN60950) conformity.

Compliance with the European EMC Directives

The EMC Directive applies not to the servo units alone but to servo-incorporated machines and equipment. It conforms to the related standard of EMC Directive by the models (installation, distance, wiring, etc. of amplifier, a motor, etc.) of our company. About the EMC Directive conforming methods, please refer to 1 chapter "Installation" of engineering handbook.

Instructions for compliance with the UL and cUL standards

Amplifier with UL/cUL mark Amplifier conforming to the UL Standards and Canada standard (cLU).

⚠ CAUTION

1.Suitable for use on a circuit capable of deliverillg not more than 5000 rms symmetrical amperes, 240V maximum.
2.Install UL certified breakers or fuses between the power supply and the Amplifier.
3.Maximum Surrounding Air Temperature 55℃.
4.Solid state motor overload protection is provided in each model.
5.Integral solid state short circuit protection does not provide branch circuit protection. Branch circuit protection must be provided in accordance with the National Electric Code and any additional local codes.
6.All circuits must have a common disconnect and be connected to the same pole of the disconnect.
7.Use 60／75 degrees Celsius CU wire only.
8. Install device in pollution degree 2 environment.

Introduction

1. Check Items at Unpacking 2
2. Visual Appearance and Name of Each Part 5
3. Combination of Motor and Amplifier 13
4. Sensor Specification and Sensor Cable 16

Section 1 Installation

1.1 Cautions on Installation 2
1.1.1 Mounting Amplifier 2
1.2 Environmental Conditions 5

Section 2 Power Circuit

2.1 Connecting Power Circuit 2
2.1.1 VLASX−008P2, 012P2, 025P2 3
2.1.2 VLASX−035P3, 070P3, 100P3, 200P3, 320P3, 500P3, 400P4 16
2.2 Selecting Peripheral Equipment 46
2.3 Wire Diameter 48
2.4 Reverse-Current Absorption Resistor 50
2.4.1 Selection of External Resistor 50
2.4.2 Reverse-Current Absorption Resistor 58
2.4.3 Connecting Reverse-Current Absorption Resistor 62
2.5 Grounding 65
2.6 Measures against Noise 67

Section 3 Signal Circuit

3.1 Input/Output Signal Table 2
3.2 Connecting Signal Circuit 6
3.2.1 Analog Input 6
3.2.2 Pulse Input 8
3.2.3 24 V Input 11
3.2.4 24 V Output 12
3.2.5 Differential Output 13
3.2.6 Motor Sensor CN5 20
3.2.7 Analog Input/Output CN17 (Option) 26

Section 4 Display/Operation Unit and Display Details

4.1 LED Lamps (GL, RS) 2
4.2 Reset Switch 3
4.3 Display/Operation Unit 4
4.4 Operating Keys 4
4.5 Hierarchal Operation 5
4.6 Operation and Details of Status Display Area 7
4.6.1 Motor Test Operation 10
4.6.2 Clear of Present Value 11
4.6.3 Motor Electronic Thermal High-Speed 11
4.6.4 Resolver ABS Special Display 12
4.6.5 ABS Sensor Multi-Turn Amount Display 13
4.6.6 Fan Test 13
4.7 Operation and Details of Check Display Area 14
4.7.1 Sequence Output Test 17
4.7.2 Clear of Alarm History 18
4.7.3 Parameter Version Display 18
4.7.4 Gate Array and CPU Board Version Display 19
4.7.5 Amplifier Model Display 19
4.8 Analog Input/Output Adjustment Parameter 20
4.8.1 Automatic Zero Adjustment 22
4.8.2 Manual Zero Adjustment 22
4.8.3 Scale Adjustment and Analog Output Zero Adjustment 23
4.9 Tuning Parameter 24
4.9.1 Auto-Tuning Operation 24
4.9.2 Filter Tuning Parameter 25
4.10 User Parameter 26

Section 5 Operation Guide

5.1 Speed Control Mode Operation 3
5.1.1 Example Connections 3
5.1.2 I/O Signal 4
5.1.3 Operation 13
5.2 Current Control Mode Operation 15
5.2.1 Standard Sequence 15
5.2.2 I/O Signal 16
5.2.3 Operation 23

5.3 Position Control Mode Operation 25
5.3.1 Example Connections 25
5.3.2 I/O Signal 26
5.3.3 Operation 34
5.4 Speed / Current / Position Control Mode Operation 35
5.4.1 Example Connections 35
5.4.2 I/O Signal 36
5.4.3 Operation 42
5.5 Direct Feed Mode Operation 43
5.5.1 Example Connections 43
5.5.2 I/O Signal 44
5.5.3 Operation 51
5.6 Draw Control Mode Operation 53
5.6.1 Example Connections 53
5.6.2 I/O Signal 54
5.6.3 Operation 59
5.7 VLBus-V Mode Operation 60
5.7.1 Example Connections 60
5.7.2 I/O Signal 62
5.7.3 Amplifier I/O Assignment Table 65
5.7.4 Setting Axis Numbers 67
5.7.5 Confirming Axis Numbers 69
5.7.6 Cautions on Using Optical Cable 70
5.7.7 Connecting Optical Communication Cable 72
5.8 User Parameter 73
5.8.1 Standard (Control Mode 1 ~ 6) 73
5.8.2 VLBus−V (Control Mode 31) 89
5.9 Special Sequence 101
5.9.1 Setting Special Sequence 101
5.9.2 How to Use Special Sequence 103
5.9.2 Special Sequence I/O Signal 104

Section 6 Auto-Tuning

6.1 General Descriptions on Auto-Tuning 2
6.1.1 Tuning Parameter 3
6.1.2 Filter Parameter 7
6.1.3 Tuning Flow Chart 15

Section 7 Absolute Position Detection System (ABS)

7.1 Configuration 3
7.2 Specifications 5
7.3 Wiring 8
7.4 Output Timing 9
7.5 Parameter Setting 10
7.6 How to Clear ABS Value (Present Value) 12
7.7 Replacement of ABS Batteries for Maintaining Absolute Position 13
7.8 Usage Examples of Resolver Multi-Turn ABS 15

Section 8 Peripheral Equipment

8.1 External Display Unit (DPA−80) 4
8.2 Brake Power Supply 4
8.3 ABS Batteries for Maintaining Absolute Position (LRV03) 5
8.4 ABS Battery for Maintaining Absolute Position (BTT06) 6
8.5 External Reverse-Current Absorption Resistor 6
8.6 Noise Filter (TDK-Make) 7
8.7 ACL/DCL 9
8.8 RS232C Conversion Connector (CV01C) 11
8.9 I/O Signal Cable (CV02C) 12
8.10 Standard Serial ABS Cable (CV05D) 13
8.11 ZA Motor Serial ABS Cable (CV05E) 15
8.12 Standard Resolver Cable (CV05G) 17
8.13 ZA Motor Resolver Cable (CV05H) 19
8.14 Single Phase Power Cable (CV06A) 21
8.15 Three (3)-Phase Power Cable (CV06B) 22
8.16 Internal Reverse-Current Absorption Resistor/MC Cable(CV07A) 23
8.17 External Reverse-Current Absorption Resistor/MC Cable (CV07B) 23
8.18 ZA Motor Armature Cable (CV08A) 24
8.19 Armature Cable for ZA Motor with Brake (CV08B) 26

8.20 Standard 130-Square Armature Cable (CV08C) 28
8.21 Standard 130-Square Armature Cable for Motor with Brake (CV08D) 30
8.22 BTT06 Battery Cable (CV09A) 32
8.23 Connector for 070P 33
8.24 Optical Communication Cable inside VLBus–V Panel (CV23A) 34
8.25 Optical Communication Cable outside VLBus–V Panel (CV24A) 34

Section 9 Characteristics

9.1 Short-Time Overload 2
9.2 Electronic Thermal 4

Section 10 Alarm Code

10.1 Alarm Display 2
10.2 Alarm Code Table and Troubleshooting 2
10.3 Troubleshooting of Other Phenomena 11

Section 11 Specifications

11.1 Control Block 2
11.2 Specifications 5
11.3 External View Drawings 6

Appendix

Appendix Structure of Engineering Handbook 2

	Introduction
Installation	Section 1
Motor Drive Circuit	Section 2
Signal Circuit	Section 3
Display/Operation Unit and Display Contents	Section 4
Operation Guide	Section 5
Auto Tuning	Section 6
Absolute Position Detecting System	Section 7
Peripheral Equipment	Section 8
Characteristics	Section 9
Alarm Code	Section 10
Specifications	Section 11
Appendix	

0

1. Check Items at Unpacking

When the product (X series servo amplifier) has reached you, check and confirm the following items.

■ Check of damage

- Is there any damage suffered during transport?

  Perform visual check on the equipment and make sure that no damage or cut is found there.

■ Check of model number

- Is the product exactly the one you ordered?

  Check for the servo amplifier model number given on the label.This label is attached to the lateral side of the servo amplifier. In addition to the servo amplifier model number, it contains the year of manufacture and serial number. Use this information when you confirm the product you ordered or when you wish to make inquiries to us.

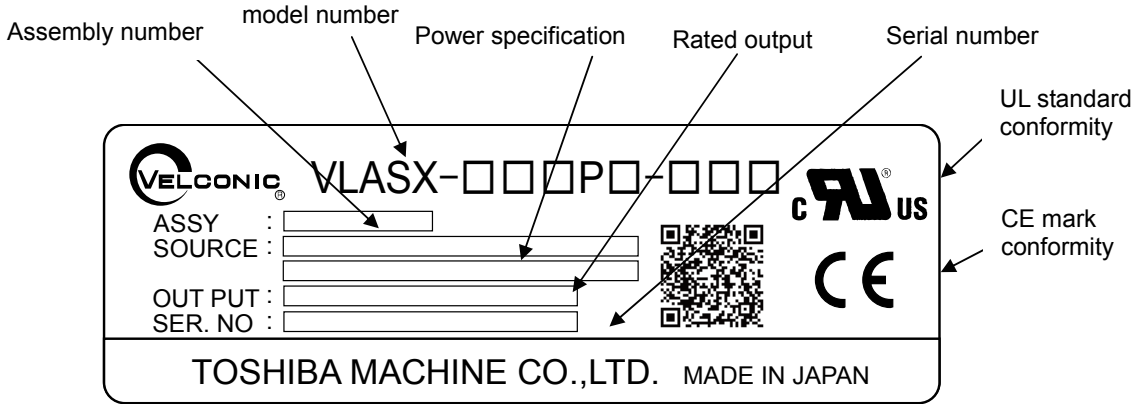

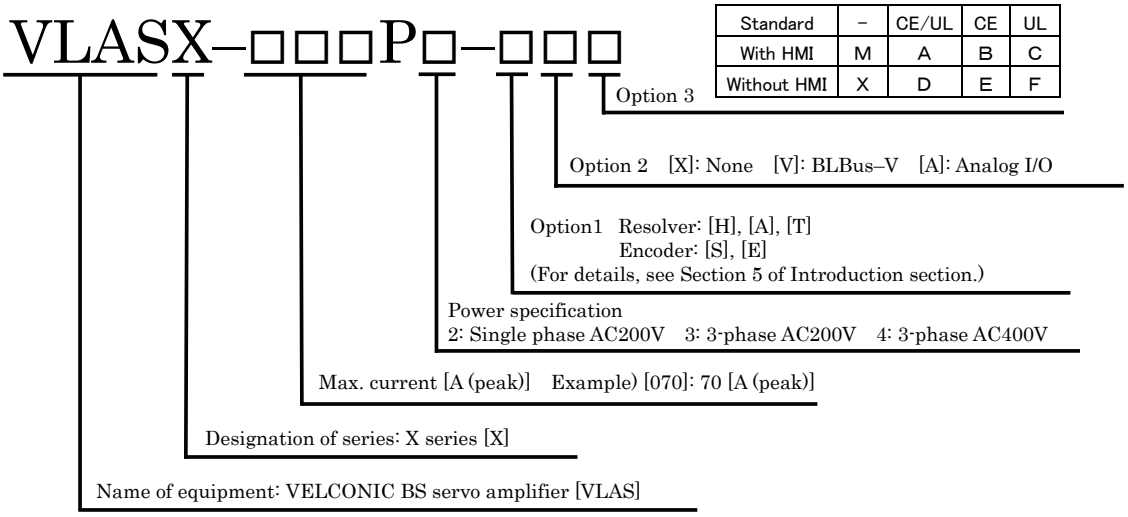

Standard	–	CE/UL	CE	UL
With HMI	M	A	B	C
Without HMI	X	D	E	F

■ Check of accessories

This equipment is not provided with any accessory.

Connectors, set screws, etc., are not attached, which should be provided by the customer. We fabricate various I/O cables including resolver cable. When you require them, consult with our after-sale service center, our sales section, or our sales agent in your territory.

If any nonconformity is found in the above items, contact our after-sale service center, our sales section, or our sales agent in your territory from which you purchased the equipment.

●Tokyo Main Branch
2-2-2 Fukoku Seimei Build., Uchisaiwai-cho, Chiyoda-ku,Tokyo 100-8503, Japan
TEL +81-3-3509-0270
FAX +81-3-3509-0335

●Numazu Headquarters
2068–3, Ooka, Numazu-shi, Shizuoka-ken 410–8510, Japan
TEL +81-55-926-5032
FAX +81-55-925-6527

●Kansai Branch
1-12-39 Shin-Hankyu Build., Umeda , Kita-ku, Osaka-shi, Osaka 530–0001, Japan
TEL +81-6-6341-6181
FAX +81-6-6345-2738

●Chubu Branch
5–307, Kamiyashiro, Meito-ku, Nagoya-shi, Aichi-ken 465–0025, Japan
TEL +81-52-702-7660
FAX +81-52-702-1141

●After-Sale Service Center of Toei Electric Co., Ltd.
131, Matsumoto, Mishima-shi. Shizuoka-ken 411–8510, Japan
TEL +81-55-977-0129
FAX +81-55-977-3744

2. Visual Appearance and Name of Each Part

0

ＶＬＡＳＸ－００８Ｐ２，０１２Ｐ２

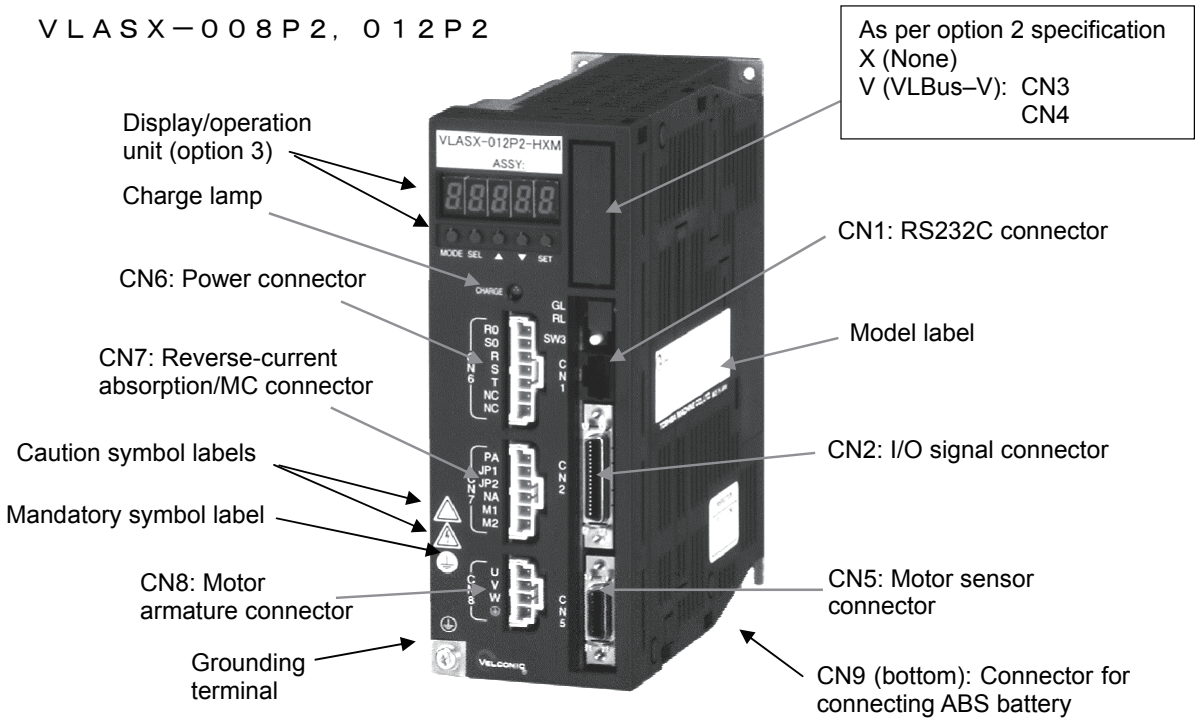

ＶＬＡＳＸ－０２５Ｐ２，０３５Ｐ３

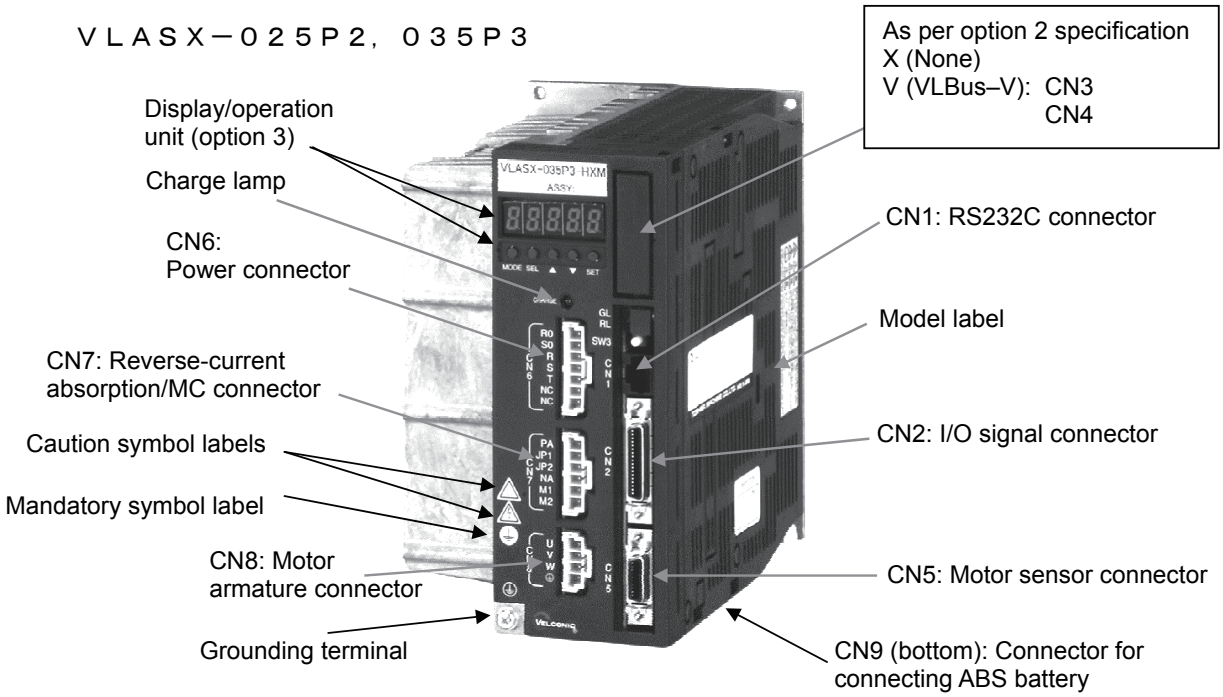

Be sure to ground the grounding terminal (E), using an electric wire. Otherwise, you may get an electric shock.	DO NOT disassemble or repair the equipment by a person other than the qualified engineer. Otherwise, the equipment may malfunction.
DO NOT impose a heavy impact on the equipment. Otherwise, the equipment may malfunction.	NEVER touch the amplifier radiator or reverse-current absorption resistor for some time after the power is turned off, or during their excitation. Otherwise, you may get burnt.

Note: Connectors CN6, 7, 8 are not attached.

0

ＶＬＡＳＸ－０７０Ｐ３

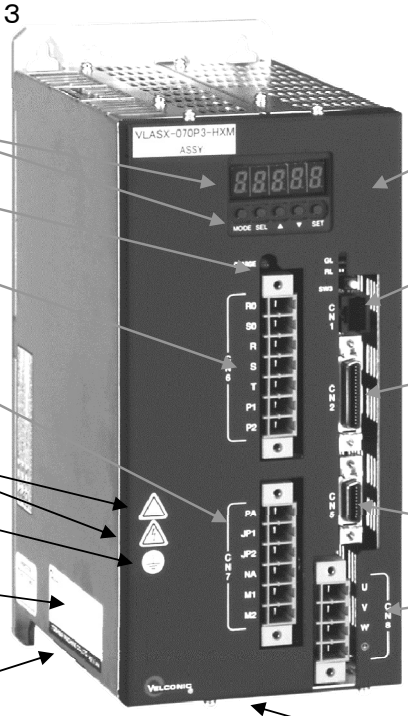

ＶＬＡＳＸ－１００Ｐ３

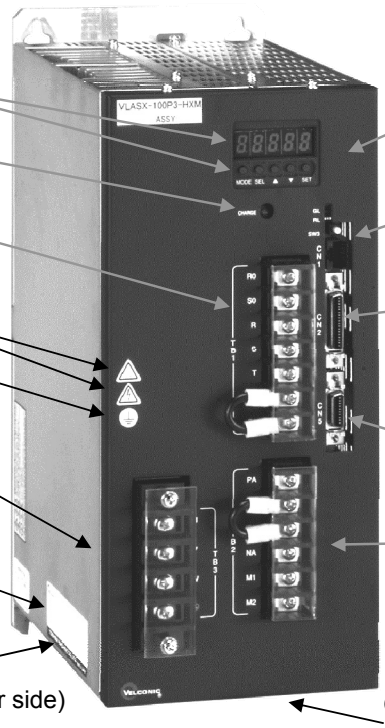

To avoid a possible electric shock or injury, be sure to observe the following matters.
1)NEVER touch the amplifier interior by hand.
2)Be sure to connect the amplifier grounding terminal.
3) Perform wiring and inspection after lapse of more than ten (10) minutes following power OFF and after making sure that the charge lamp is turned off, then the voltage. Otherwise, you may get an electric shock.
4)DO NOT cut the cable, stretch it excessively, exert a heavy load on it or overtwist it. Otherwise, you may get an electric shock.

0

VLASX－200P3

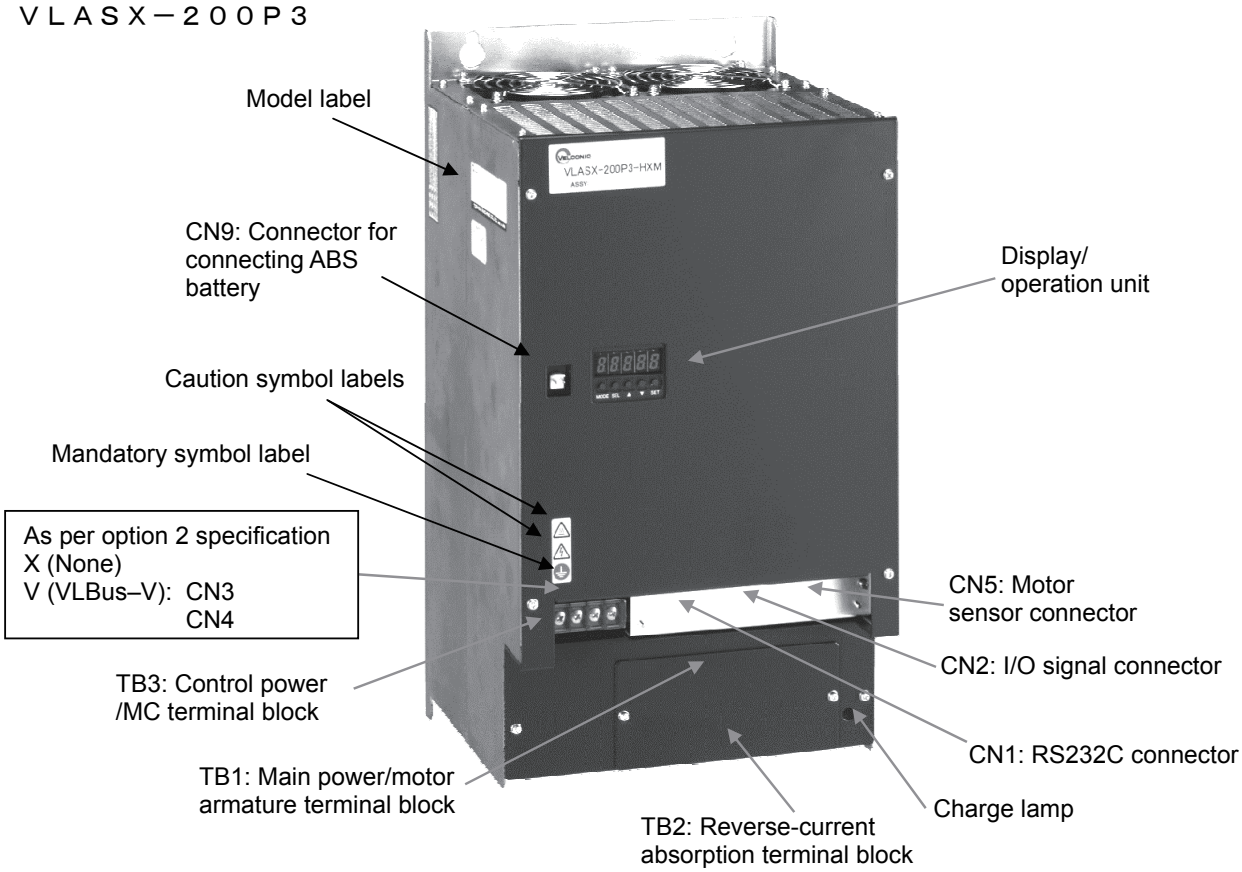

VLASX－320P3

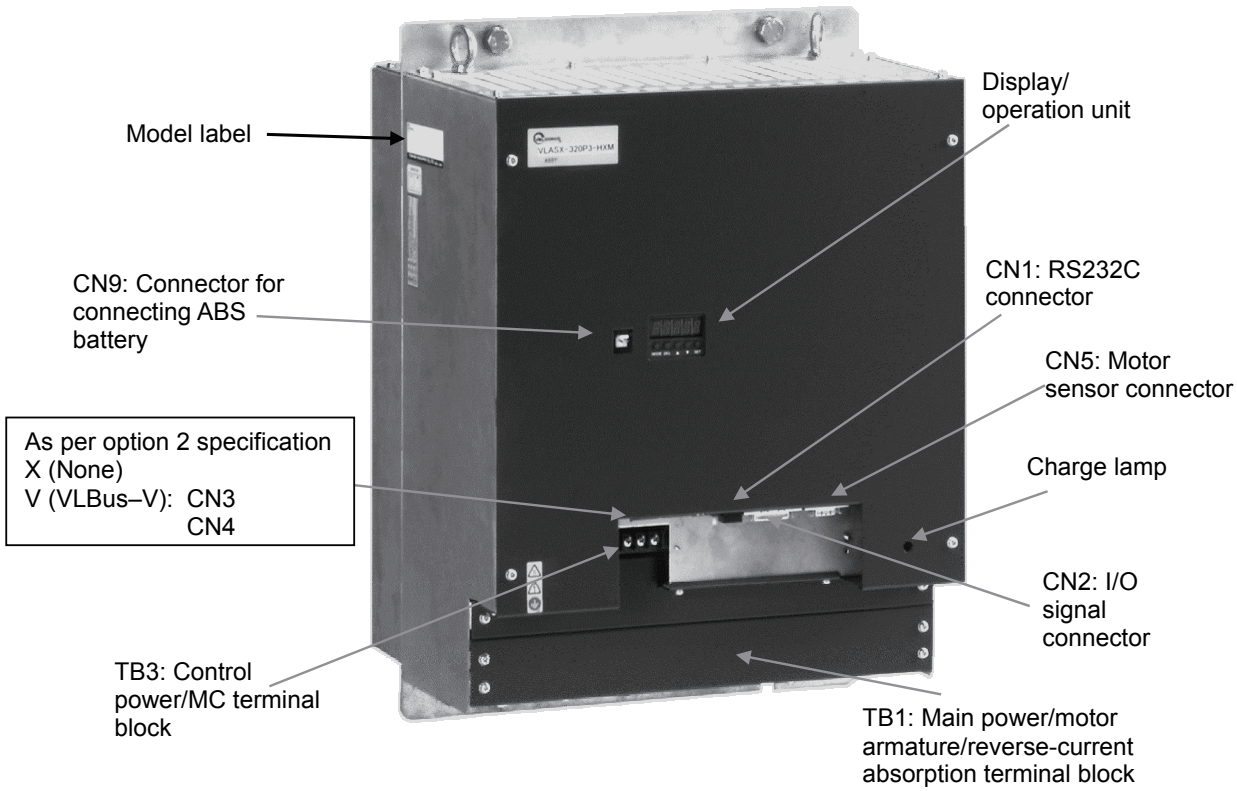

ＶＬＡＳＸ－５００Ｐ３、４００Ｐ４

The photo shows VLASX–400P4.

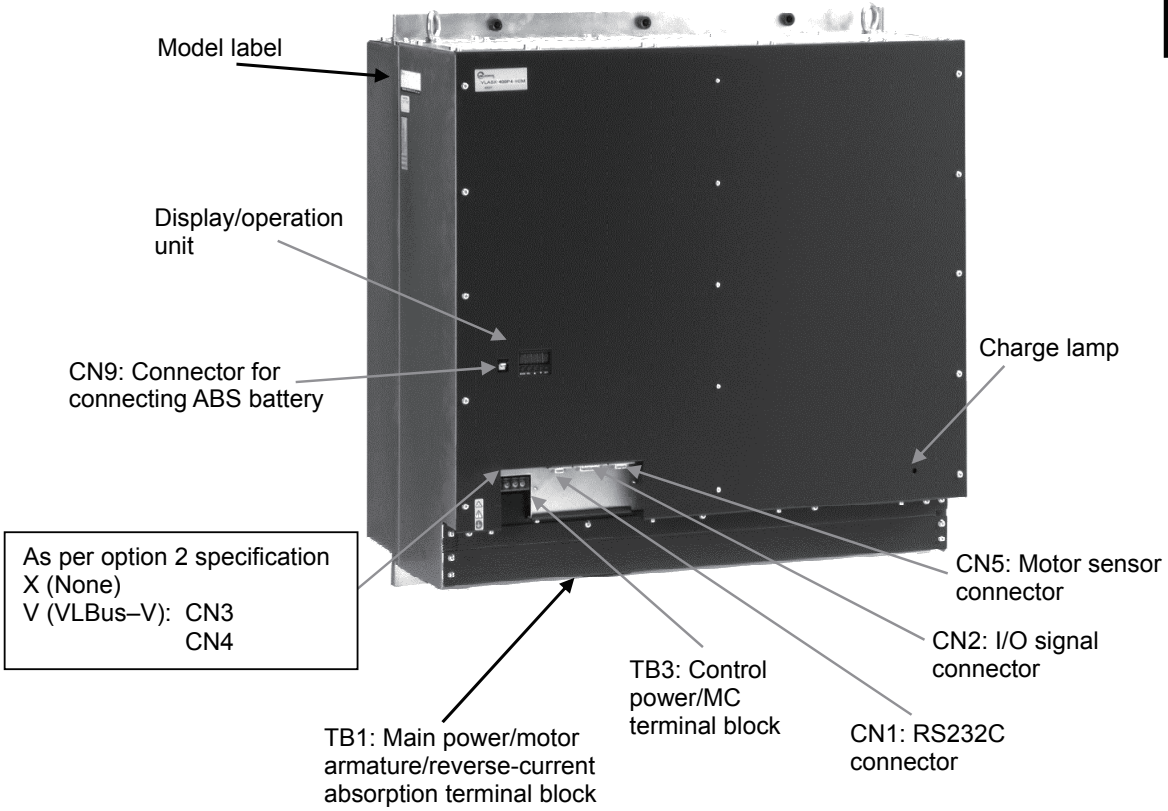

Be sure to ground the grounding terminal (E), using an electric wire. Otherwise, you may get an electric shock.

DO NOT disassemble or repair the equipment by a person other than the qualified engineer. Otherwise, the equipment may malfunction.

DO NOT impose a heavy impact on the equipment. Otherwise, the equipment may malfunction.。

NEVER touch the amplifier radiator or reverse-current absorption resistor for some time after the power is turned off, or during their excitation. Otherwise, you may get burnt.

To avoid a possible electric shock or injury, be sure to observe the following matters.
1)NEVER touch the amplifier interior by hand.
2)Be sure to connect the amplifier grounding terminal.
3) Perform wiring and inspection after lapse of more than ten (10) minutes following power OFF and after making sure that the charge lamp is turned off, then the voltage. Otherwise, you may get an electric shock.
4)DO NOT cut the cable, stretch it excessively, exert a heavy load on it or overtwist it. Otherwise, you may get an electric shock.

3. Combination of Motor and Amplifier

0

Use a desired combination of X-series servo amplifier and servo motor as shown in the table below.

When the power is turned on, parameter setting error AL 26 occurs. Specify the control mode and selected motor code for user parameters UP-01 and UP-02, respectively. Turn the power off once and make sure that the display unit has turned off, then turn the power on again.

If illegal setting is done, they will not operate normally.

Note: Unless the display/operation unit is provided optionally, LED lamps are used instead. For details, see Section 4.

Resolver specification (Applicable amplifier: VLASX–□□□P□–H□□, –A□□)

Motor speed	Motor model VLBSV–	Output power	Motor code UP02	Applicable amp. VLASX–
ZA-type 3,000 min^{-1}	ZA00330	30 W	01061	008P2
	ZA00530	50 W	01062	008P2
	ZA01030	100 W	01063	008P2
	ZA02030	200 W	01064	008P2
	ZA04030	400 W	01065	012P2
	ZA06030	600 W	01066	025P2
	ZA07530	750 W	01067	025P2
ZA-type 1,500 min^{-1}	ZA11K15	11 kW	01080	200P3
	ZA14K15	14 kW	01082	320P3
Standard type 1,500 min^{-1}	05015	500 W	01021	012P2
	10015	1 kW	01022	035P3
	15015	1.5 kW	01023	035P3
	20015	2 kW	01024	070P3
	30015	3 kW	01025	070P3
	50015	5 kW	01026	100P3
	75015	7.5 kW	01027	200P3
Standard type 3,000 min^{-1}	10030	1 kW	01041	035P3
	18030	1.8 kW	01042	070P3
	24030	2.4 kW	01043	070P3
	30030	3 kW	01044	070P3
	45030	4.5 kW	01045	100P3
	70030	7 kW	01046	200P3
	10K30	10 kW	01047	200P3

Motor speed	Motor model VLBSG–	Output power	Motor code UP02	Applicable amp. VLASX–
Standard type 2,000 min^{-1}	A20K20	20 kW	01350	320P3
	A33K20	33 kW	01351	500P3
	B55K20	55 kW	01359	400P4

CAUTION Use a specified combination of motor and amplifier. Otherwise, a fire or malfunction may be caused.

Motor speed	Motor model VLBST–	Output power	Motor code UP02	Applicable amp. VLASX–	
Standard type 1,500 min^{-1}	04015V	400 W	01101	012P2	
	08015V	800 W	01102	025P2	
	10015V	1 kW	01103	025P2	
	15015V	1.5 kW	01104	035P3	
	26015V	2.6 kW	01105	070P3	
	37015V	3.7 kW (3.3 kW)	01106	100P3 (070P3)	∗1
	50015V	5 kW	01107	100P3	
Standard type 2,000 min^{-1}	75020V	7.5 kW	01108	200P3	
	10K20V	10 kW	01109	200P3	
Standard type 3,000 min^{-1}	05030V	500 W	01113	012P2	
	08030V	800 W	01114	025P2	
	14030V	1.4 kW	01115	035P3	
	18030V	1.8 kW	01116	070P3	
	24030V	2.4 kW	01117	070P3	
	37030V	3.7 kW (3.4 kW)	01118	100P3 (070P3)	∗1
	55030V	5.5 kW (5.0 kW)	01119	200P3 (100P3)	∗1
	65030V	6.5 kW	01120	200P3	

(∗1) Can be used in combination with an amplifier parenthesized.
For the output, however, a value given in parentheses is used.

Encoder specification (Applicable amplifier: VLASX–□□□P□–S□□)

Motor speed	Motor model VLBSV–	Output power	Motor code UP02	Applicable amp. VLASX–
ZA-type 3,000 min^{-1}	ZA00330S1	30 W	02061	008P2
	ZA00530S1	50 W	02062	008P2
	ZA01030S1	100 W	02063	008P2
	ZA02030S1	200 W	02064	008P2
	ZA04030S1	400 W	02065	012P2
	ZA06030S1	600 W	02066	025P2
	ZA07530S1	750 W	02067	025P2
Standard type 1,500 min^{-1}	05015S1	500 W	02021	012P2
	10015S1	1 kW	02022	035P3
	15015S1	1.5 kW	02023	035P3
	20015S1	2 kW	02024	070P3
	30015S1	3 kW	02025	070P3
	50015S1	5 kW	02026	100P3
	75015S1	7.5 kW	02027	200P3
Standard type 3,000 min^{-1}	10030S1	1 kW	02041	035P3
	18030S1	1.8 kW	02042	070P3
	24030S1	2.4 kW	02043	070P3
	30030S1	3 kW	02044	070P3
	45030S1	4.5 kW	02045	100P3
	70030S1	7 kW	02046	200P3
	10K30S1	10 kW	02047	200P3

0

4. Sensor Specification and Sensor Cable

Option 1 and required sensor cable vary with the motor and functions to be used.

Motor used			ABS function	Applicable amplifier	Applicable cable
Series	Name	Type		VLASX- □□□P□	
V	Resolver motor	VLBSV- □□□□□	Absent	H□□	CV05G- □□□*
		VLBSV- ZA□□□15	Present	A□□	
		VLBSV- ZA□□□30	Absent	H□□	CV05H- □□□*
			Present	A□□	
	17-bit serial ABS encoder motor	VLBSV- □□□□□S1	Present	S□□	CV05D- □□□*
		VLBSV- ZA□□□15S1			
		VLBSV- ZA□□□30S1			CV05E- □□□*
T	Resolver motor (20 kHz)	VLBST- □□□□□V	Absent	H□□	CV05G- □□□*
			Present	A□□	
	Resolver motor (5 kHz)	VLBST- □□□□□	Absent	T□□	
G	Resolver motor	VLBSG- A□□□20	Absent	H□□	
			Present	A□□	

Installation Section 1

1-1. Cautions on Installation 1
1-1-1. Mounting Amplifier 1
1-2. Environmental Conditions 3
1-3. Installing EMC Amplifier 4
1-3-1. Installing Conditions Pursuant to EMC Standard 4
1-3-2. Conditions required for conformity 4
1-3-3. Noise filter 5
1-3-4. Serge absorber 6
1-3-5. Ferrite Core 6
1-3-6. Securing Cables 6
1-3-7. Shield Box 6

1 - 1 . Cautions on Installation

- This servo amplifier is hung on the wall or embedded in the floor. Secure it in the vertical direction with screws or bolts so that the operation display can be observed properly from the front side without the upside down.
- When mounting the servo amplifier, keep the clearances in the up, down and horizontal directions as specified in the figure below. Also, when mounting multiple amplifiers side by side, keep the clearances as shown in the figure below.。
- When the amplifier is assembled in the control cabinet, the temperature in the cabinet should not rise to +55°C or over. Otherwise, it will malfunction.
- Avoid installing the amplifier at a place where it is exposed to direct sunlight, high temperature or high humidity, and at a place where too much hazardous gases, dusts, metal chips, oil mist are involved. Make sure that they will not enter the servo amplifier.
- Mount a heat source such as reverse-current absorption resistor away from the servo amplifier.
- Mount a noise filter near the servo amplifier.

1 - 1 - 1 . Mounting Amplifier

(1) 008P2, 012P2

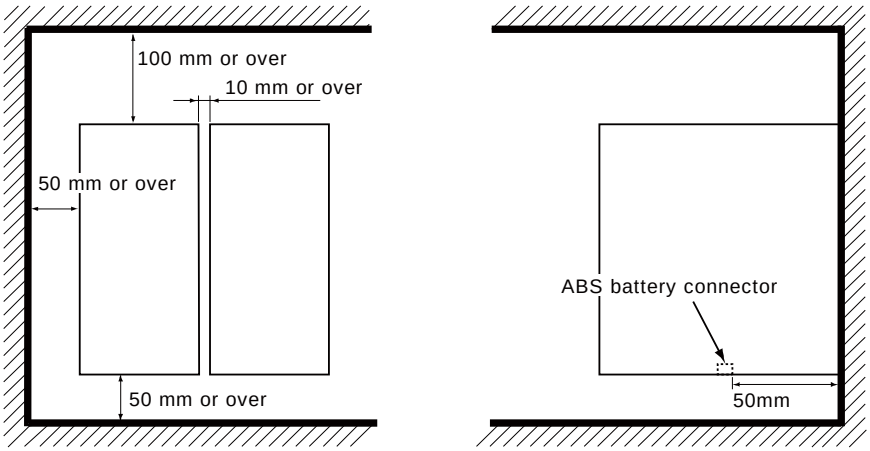

(2) 025P2, 035P3

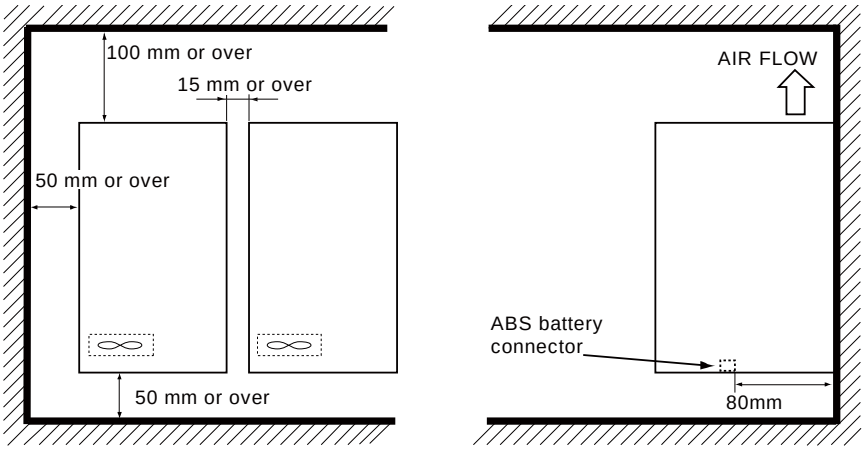

Note: A cooling fan is provided only for 035P3.

⚠ CAUTION	♨	The cooling fins become hot. Choose an installation place so that the cooling effect can be maximized. DO NOT touch the fins. Otherwise, you may burn your hand.

(3) 070P3, 100P3

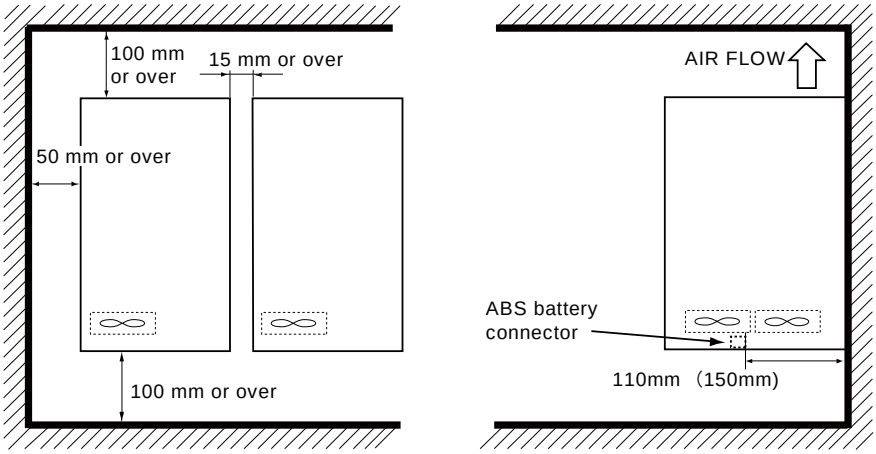

(4) 200P3

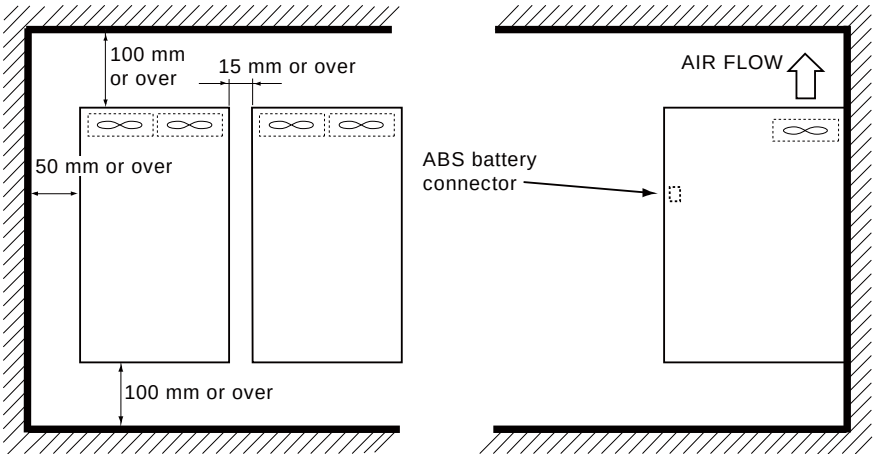

(5) 320P3, 500P3, 400P4

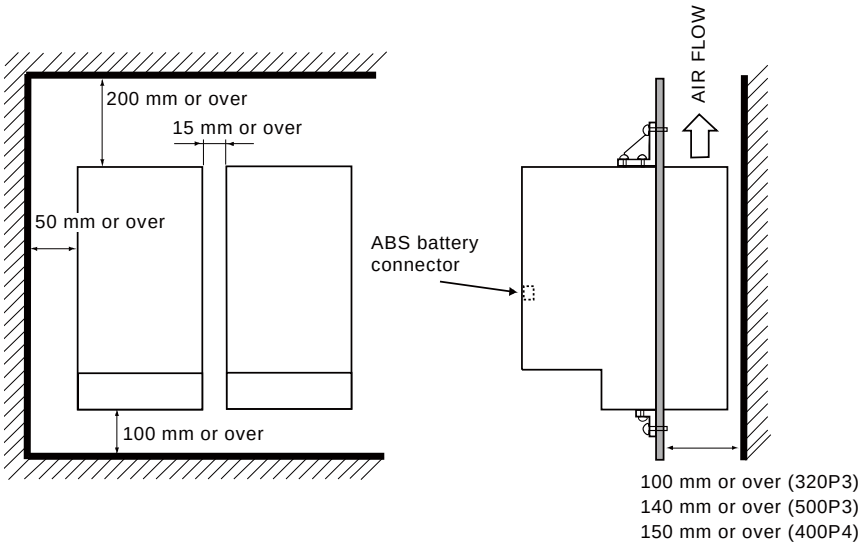

Caution: When an ABS battery is used for holding an absolute position, the connector of the amplifier, which is located on the bottom of the unit, requires a sufficient space to prevent interference with wiring ducts.

1-2. Environmental Conditions

Environment		Conditions
Ambient temperature		0 ～ +55°C or less (non-freezing)
Ambient humidity		10 ～ 90 %RH (non-condensing)
Storage temperature		–10 ～ +70°C (non-freezing)
Storage humidity		10 ～ 90 %RH (non-condensing)
Altitude for installation		1,000 m or less
Atmosphere		Dust, metal chip, oil mist, corrosive gas or explosive gas should not be involved.
Vibration (*1)	008P2,012P2,025P2, 035P3,070P3,100P3, 200P3	Pursuant to IEC60068–2–6. Frequency 10 ～ 57 Hz One-way amplitude 0.075 mm Frequency 57 ～ 150 Hz Acceleration 9.8 m/s^2

(*1) Each amplifier is verified to run normally under the above specified conditions.

⚠ CAUTION	
	NEVER use the equipment at a place where it is exposed to water splash, in a corrosive atmosphere, in an atmosphere containing inflammable gas or metal chip, or near combustibles. Otherwise, a fire or equipment failure may be caused.
	NEVER store the equipment at a place where it is exposed to rain or water drip, or at a place where hazardous gas or liquid is involved.
	Store the equipment at a place where it is not exposed to direct sunlight and the predetermined temperature and humidity (–10 ～ +70°C, 10 ～ 90 %RH) are maintained.

1-3. Installing EMC Amplifier

This paragraph describes the recommended conditions for installing an amplifier with CE Mark, which conforms the EMC (Electromagnetic Compatibility) standard (EN55011 Group 1 Class A, EN61000–6–2, EN61800–3).
Please note, however, that as this product is built into an equipment, the customer should make sure the conformity of the whole equipment to the EMC standard.
Recommended devices, etc. differ in between this paragraph and other paragraphs. Priority should be given to this paragraph for all matters relating to conformity to the EMC standard.

1-3-1. Installing Conditions Pursuant to EMC Standard

The recommended installing conditions of the representative models pursuant to the EMC standard are shown below. Refer to these conditions also for the other models (i.e., amplifiers with CE Mark). The conditions for conformity to the EMC standard as described below were successfully tested under Toshiba Machine's conditions, which will vary, however, with the structure of actual equipment, relationship with other built-in mechanical and electric equipment, wiring, location, etc.

1-3-2. Conditions required for conformity

1) Install in a metal Control Box (Shield Box).
2) Install a noise filter and serge absorber into power line.
3) Use a shield cable for the power cable, armature cable, Input/Output signal cable and Communication cable of a Motor.
4) Use an exclusive cable for the sensor cable, which should pass through the conduit.
5) Insert ferrite cores at designated positions shown below.
6) When mounting a reverse-current absorption resistor, etc. outside the control box, be sure to use a shield cable.

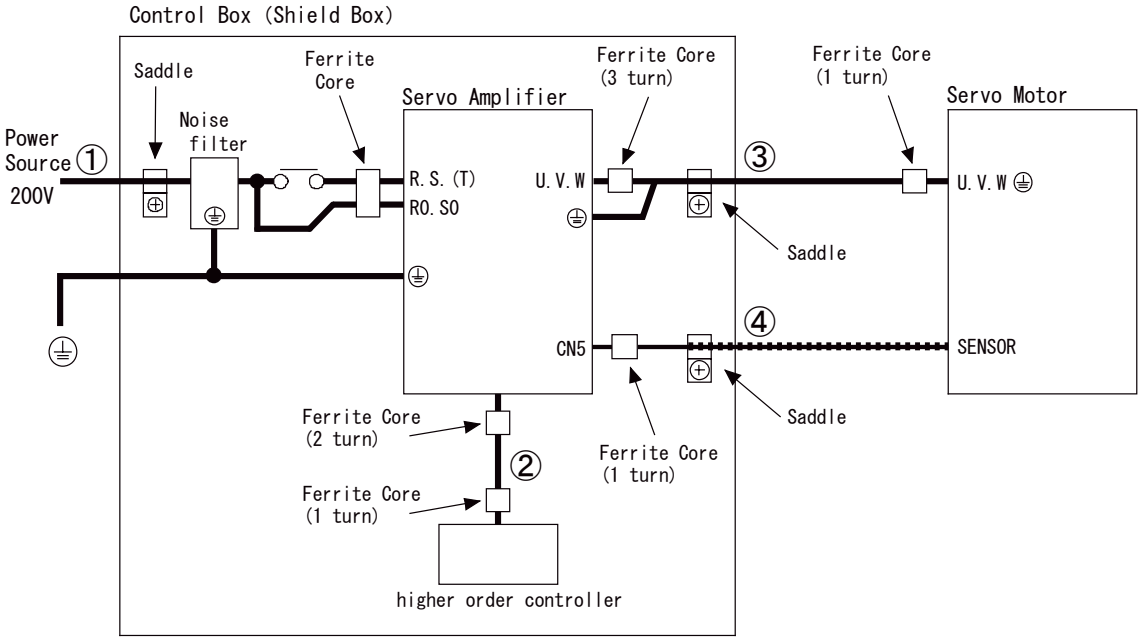

Sign	Use	Spec.
①	power cable	shield cable
②	Input/Output signal cable Communication cable	shield cable
③	armature cable	shield cable
④	sensor cable	stitch flake

1

1-3-3. Noise filter

Make the following type of installation and wiring in order to not lose the effect of filter.

1) Make sure that the mounted Servo Amplifier and filter retain electrical conductivity, by masking the plating or paint.

2) Connect the operating power supply and main power supply Servo Amplifier the recommended filter.

3) Install the filter immediately adjacent to the Servo Amplifier, and shorten the wiring (filter secondary side) between them.

4) Wire the primary & secondary sides of filter separated from each other.

And, Wire the secondary side of filter independently, and separate it away from other wiring.

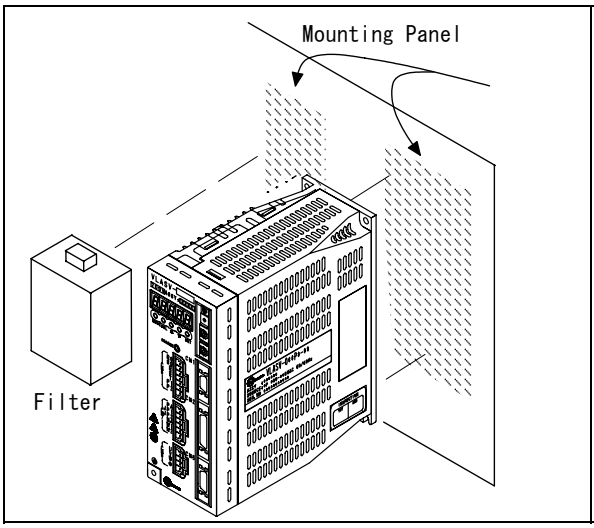

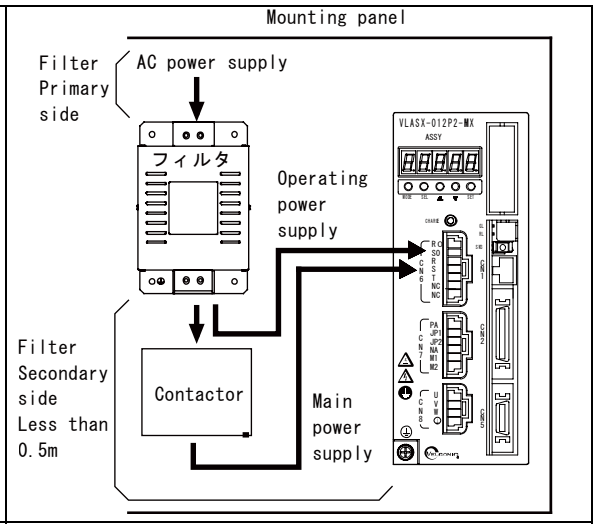

Motor capacity	Filter type	Maker	Note
30～500W	RTHN-5006	TDK	3phase 6A
600～1.5KW	RTHN-5010		3phase 10A
1.8～3.0KW	RTHN-5020		3phase 20A
4.5～10kW	ZRCT5050-MF	TDK	3 phase50A
11KW	ZRCT5080-MF		3 phase80A

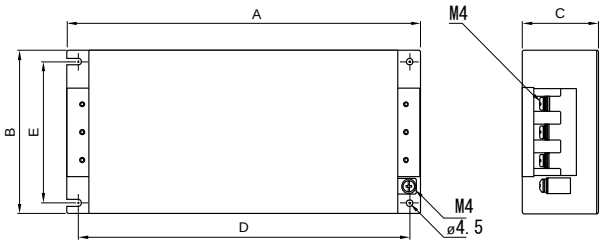

Unit : m m

Filter type	A	B	C	D	E
RTHN-5006	210	95	50	195	78
RTHN-5010					
RTHN-5020	240	105	55	225	85

Diagram of outer dimensions of RTHN-50□□

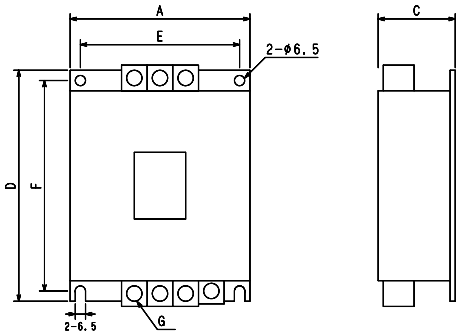

Filter type	A	D	C	E	F	G
ZRCT5050-MF	164	396	68	135	369	M6
ZRCT5080-MF	169	445	72	141	418	M8

Diagram of outer dimensions of ZRCT50□□－MF

1-3-4. Serge absorber

Select the Serge absorber to be installed on power line, referring to the right side table.
Please ask details.

Applicable amplifier	Serge absorber type	Maker
VL□□X-□□□P2-□□□	RCM-601BQZ-4	OKAYA ELECTRIC INDUSTRIES
VL□□X-□□□P3-□□□	RCM-601BUZ-4	

1-3-5. Ferrite Core

SR type

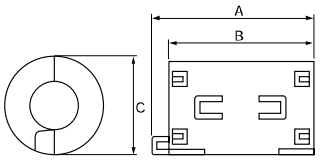

E04SR401938 only

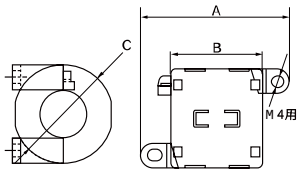

(mm)

type	A	B	C	The diameter of an application electric wire
E04SR200932	36	32	19.5	9.0
E04SR211132	36	32	20.5	11.0
E04SR301334	39	34	30.0	13.0
E04SR401938	61	38	40.0	19.0

Maker : SEIWA ELECTRIC

1-3-6. Securing Cables

Secure the shield area of each cable, using a conductive cable clamp, then ground it.
Saddle recommends the thing of lower figure.

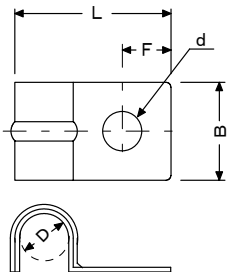

PZ01□□ (大和電業)

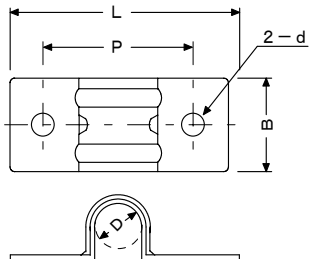

FCD□□ (大和電業)

	D	L	B	F	P	d
PZ0106 (single saddle)	6	17.8	10	5		4.5
PZ0108 (single saddle)	8	23	12	5		5.5
FCD-6 (double saddle)	11	43	14		29	5.2
FCD-9(double saddle)	15.5	48.5	16		34.5	5.2
FCD-13(double saddle)	18	52	18		38	5.2

1-3-7. Shield Box

To block an electromagnetic interference (EMI) from the servo amplifier, use of a shield box (i.e., sealed metallic enclosure) is necessary. The shield box should be such designed that the amplifier, door and panel can maintain the electric insulation.
Make the opening area of the shield box as small as possible.

Power Circuit	Section 2

2.1 Connecting Power Circuit 2

2.1.1 VLASX–008P2, 012P2, 025P2 3

2.1.2 VLASX–035P3, 070P3, 100P3, 200P3, 320P3, 500P3, 400P4 16

2.2 Selecting Peripheral Equipment 46

2.3 Wire Diameter 48

2.4 Reverse-Current Absorption Resistor 50

2.4.1 Selection of External Resistor 50

2.4.2 Reverse-Current Absorption Resistor 58

2.4.3 Connecting Reverse-Current Absorption Resistor 62

2.5 Grounding 65

2.6 Measures against Noise 67

2.1 Connecting Power Circuit

The power circuit consists of a power supply circuit, a motor main circuit, a holding brake/dynamic brake circuit and a reverse-current absorption circuit.

- Power supply circuit
  The power supply circuit includes a breaker, noise filter for preventing noise from influencing the external equipment, emergency stop contactor, etc.

- Motor main circuit
  The motor main circuit should be connected directly with an amplifier and motor without connecting a breaker or contactor.

- Holding brake (DC24 V, non-excited starting type)
  The holding brake is used to prevent the vertical axis from dropping when the power is turned off and to retain the horizontal axis. This brake should not be used, therefore, for the braking purpose.
  The brake is ON without excitation. An auxiliary contact should be connected to the amplifier to check the brake contactor for the ON and OFF state.

- Dynamic brake
  The dynamic brake is used to stop the motor instantly at power failure or alarm generation. It should not be used for mechanical holding.
  The brake actuates when the motor armature is short-circuited with the contactor. An auxiliary contact should be connected to the amplifier to check the brake contactor for the ON and OFF state.

- Reverse-current absorption resistor
  The reverse-current absorption resistor suppresses rise in DC master power voltage which is caused by the energy returned to the amplifier during absorption run for braking the motor or for using the motor as a load. Though the standard reverse-current absorption resistor is incorporated in the amplifier, an additional external resistor may be required according to the amount of reverse-current energy.

2.1.1 VLASX–008P2, 012P2, 025P2

(1) When neither holding brake nor dynamic brake is used:

- Operation sequence

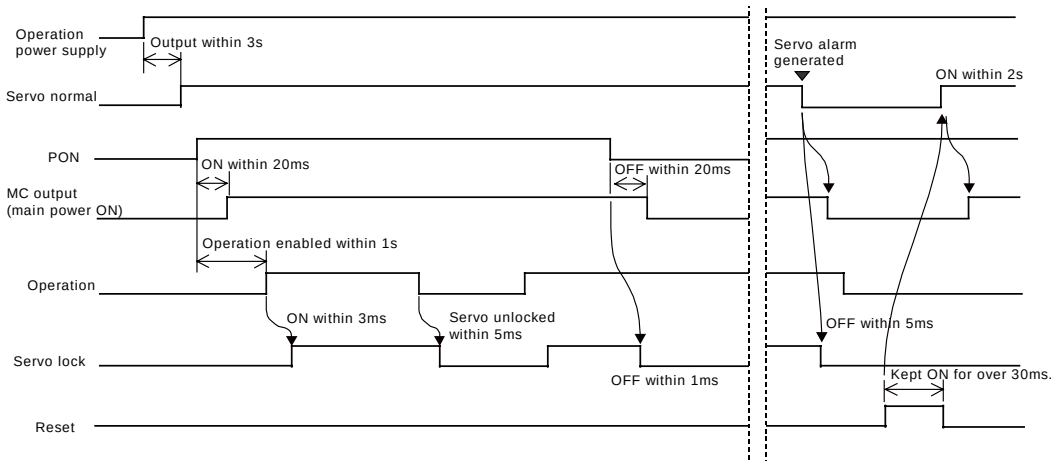

! **CAUTION**	Shift to the sequence to turn off the operation signal after the servo normal signal has turned off. Otherwise, it is dangerous because servo lock is effected immediately after resetting.

- Wiring

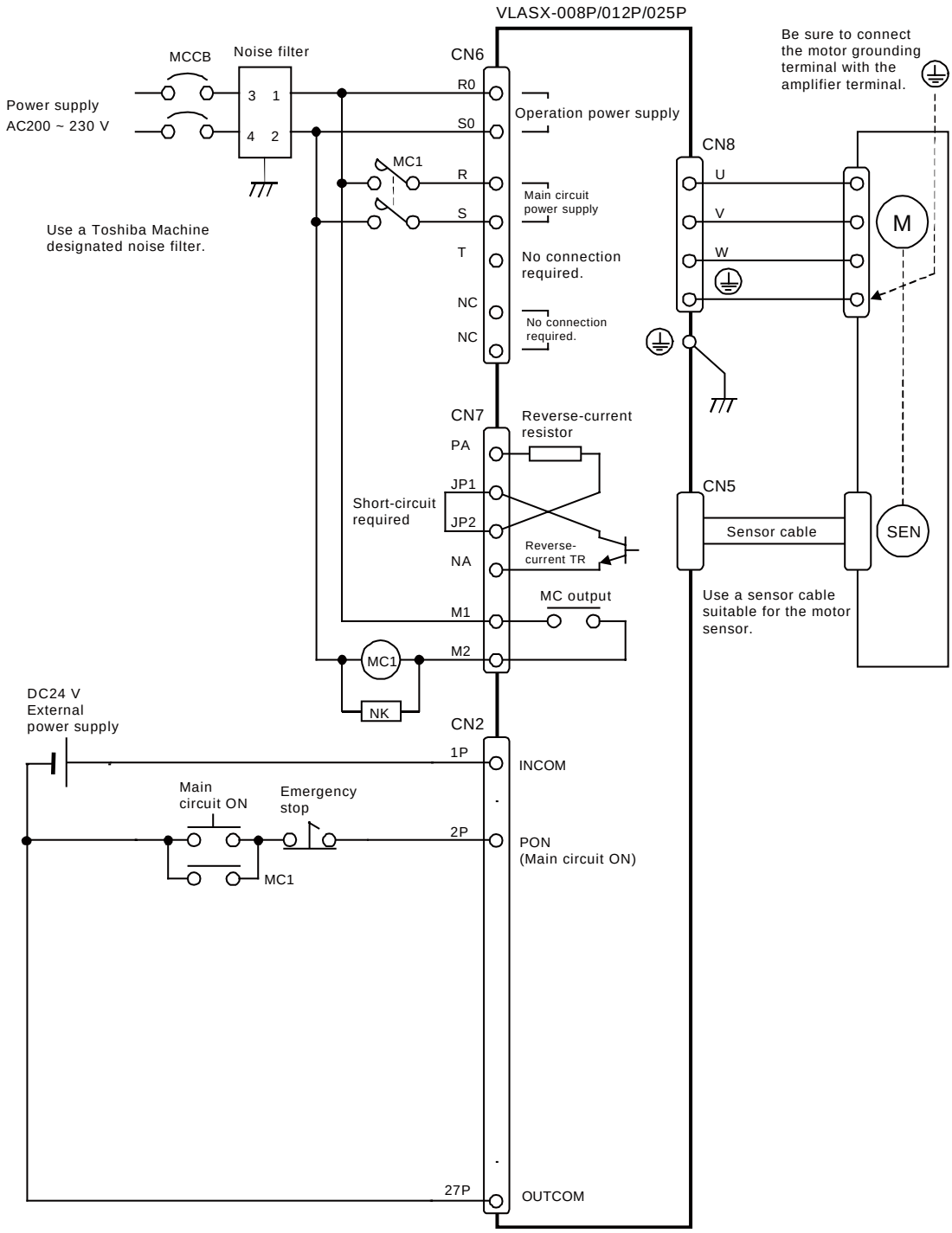
VLASX-008P/012P/025P
MCCB
Noise filter
Power supply
AC200 ~ 230 V
3 1
4 2
Use a Toshiba Machine designated noise filter.
CN6
R0
S0
MC1
R
S
T
NC
NC
Operation power supply
Main circuit power supply
No connection required.
No connection required.
CN7
PA
JP1
JP2
NA
M1
M2
Reverse-current resistor
Short-circuit required
Reverse-current TR
MC output
MC1
NK
DC24 V External power supply
CN2
1P
2P
27P
INCOM
PON (Main circuit ON)
OUTCOM
Main circuit ON
Emergency stop
MC1
CN8
U
V
W
Be sure to connect the motor grounding terminal with the amplifier terminal.
M
CN5
Sensor cable
SEN
Use a sensor cable suitable for the motor sensor.

Note 1: Separate the power supply and motor armature wiring from the motor sensor cable.

Note 2: Be sure to connect the motor grounding terminal with the amplifier grounding terminal to ground the servo amplifier.

Note 3: Attach a surge killer to the contactor and relay coils to prevent influence of noise.

CAUTION	The power supply should be connected only to the R or S terminal. Otherwise, a fire may be caused.

(2) When the holding brake (MB) is used:

Note 1: Make sure that the sequence I/O includes “MB check” and “MB output.” Unless the MB operation is confirmed, an alarm (AL14: brake error) will generate. Particular care is required when the special sequence is selected by user parameter UP46 (sequence I/O selection).

Note 2: When you stop operation, the speed starts reducing, and when the speed falls below the brake ON level, the servo is unlocked with the holding brake applied. The holding brake operation setting is specified by user parameter UP13. When UP13 = 00, the deceleration time becomes zero (0) and the holding brake starts working when the actual speed slows down to below the brake ON speed (UP14).
When UP13 = 01, the speed decelerates along a deceleration curve selected then and the holding brake starts working when the actual speed slows down to below the brake ON speed.

Note 3: It is possible to specify the revolution speed at which the holding brake is applied by user parameter UP14 (brake ON speed). This parameter is intended for avoiding the use of the holding brake as the speed control brake and prevents the holding brake ON until the speed falls below the set level.

Note 4: Immediately after PON has turned off or when an alarm has generated, the servo is unlocked and the brake is applied. DO NOT turn off the PON frequently during operation.

Relevant user parameter	
Holding brake operation UP13	00 or 01
Brake ON revolution speed UP14	0.0 ~ 100.0 %

- Operation sequence

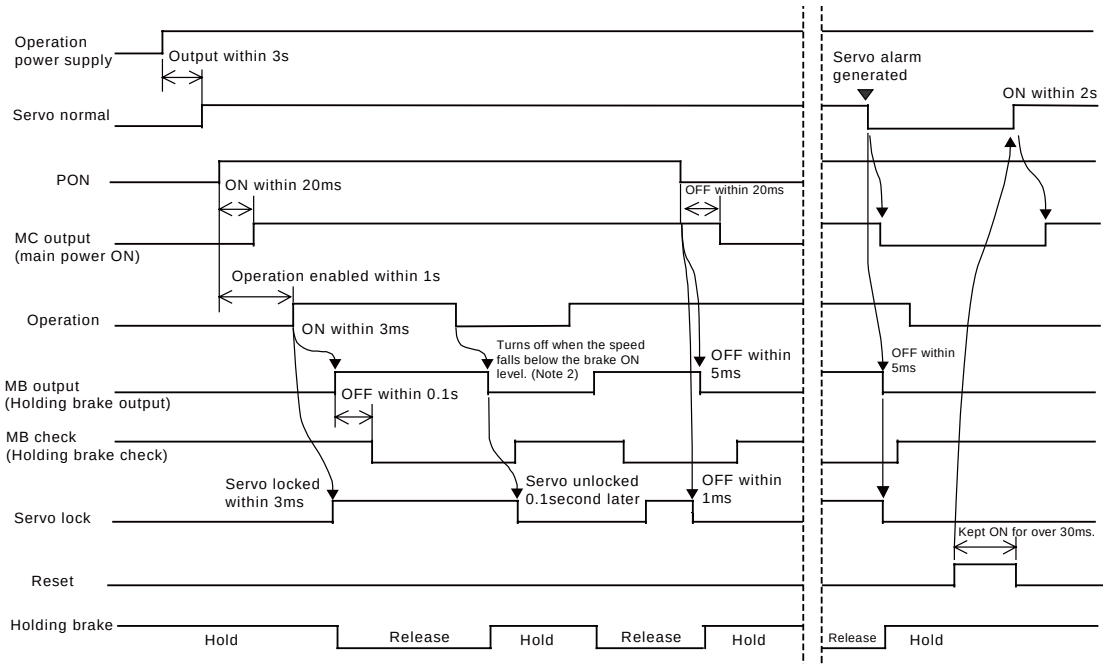

⚠ **CAUTION**	⚠ Shift to the sequence to turn off the operation signal after the servo normal signal has turned off. Otherwise, it is dangerous because servo lock is effected immediately after resetting.

- Wiring

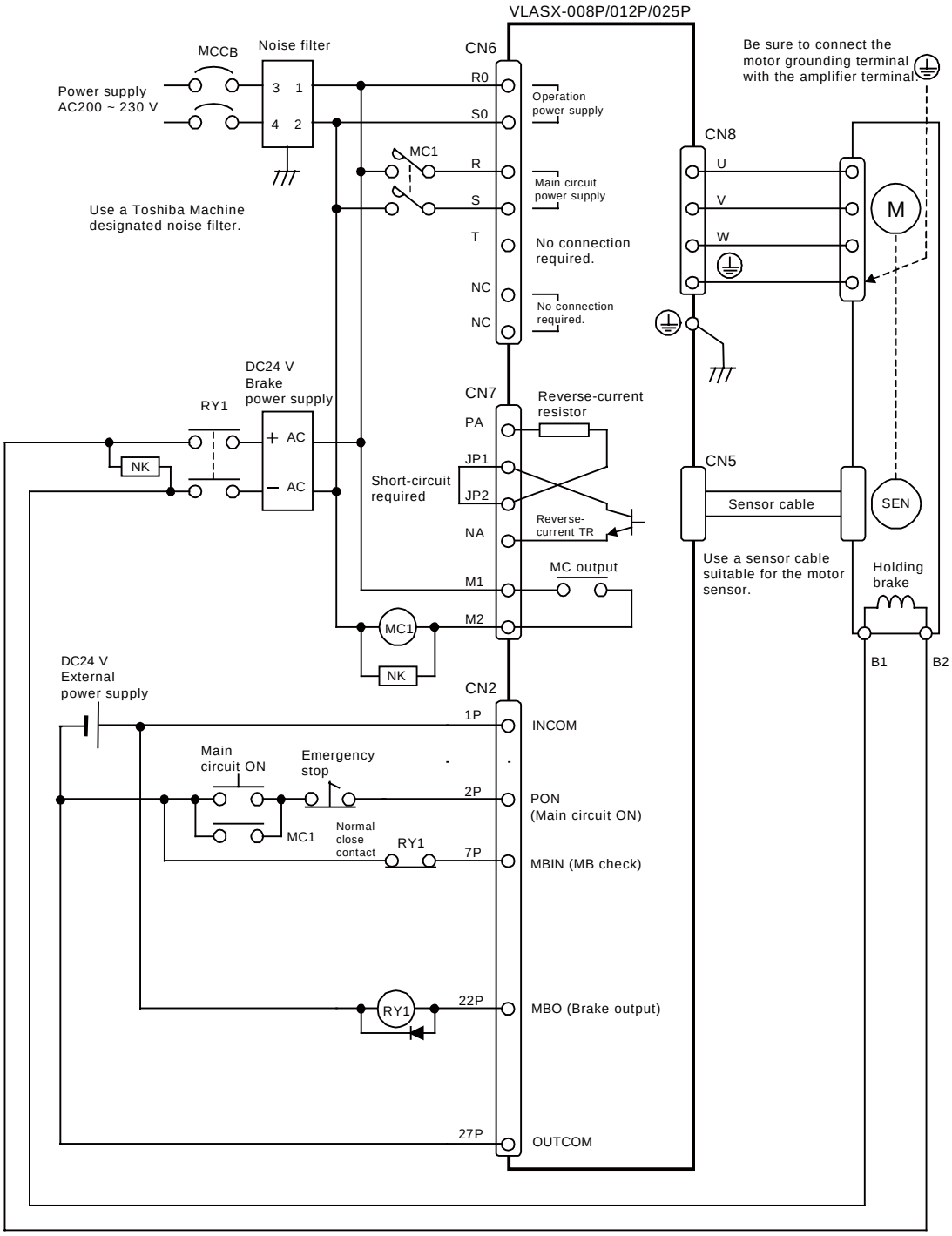
VLASX-008P/012P/025P
MCCB
Noise filter
Power supply
AC200 ~ 230 V
3 1
4 2
Use a Toshiba Machine designated noise filter.
CN6
R0
S0
R
S
T
NC
NC
Operation power supply
Main circuit power supply
No connection required.
No connection required.
MC1
Be sure to connect the motor grounding terminal with the amplifier terminal.
CN8
U
V
W
M
DC24 V Brake power supply
RY1
NK
+ AC
− AC
CN7
PA
JP1
JP2
NA
M1
M2
Reverse-current resistor
Short-circuit required
Reverse-current TR
MC output
MC1
NK
CN5
Sensor cable
SEN
Use a sensor cable suitable for the motor sensor.
Holding brake
B1
B2
DC24 V External power supply
CN2
1P
2P
7P
22P
27P
INCOM
PON (Main circuit ON)
MBIN (MB check)
MBO (Brake output)
OUTCOM
Main circuit ON
Emergency stop
MC1
Normal close contact
RY1
RY1

Note 1: Separate the power supply and motor armature wiring from the motor sensor cable.

Note 2: Be sure to connect the motor grounding terminal with the amplifier grounding terminal to ground the servo amplifier.

Note 3: Attach a surge killer to the contactor and relay coils to prevent influence of noise.

⚠ **CAUTION**	⚠ If motor armature wires U, V and W are connected wrongly, the motor may go uncontrollable. To avoid this, check for the connections and perform a test run before starting an operation.

(3) When the dynamic brake (DB) is used:

Note 1: Make sure that the sequence I/O includes “DB check” and “DB output.” Unless the DB operation is confirmed, an alarm (AL14: brake error) will generate. Particular care is required when the special sequence is selected by user parameter UP46 (sequence I/O selection).

Note 2: Immediately after operation has stopped, the servo is unlocked and the dynamic brake is applied.

Note 3: Immediately after PON has turned off or when an alarm has generated, the servo is unlocked and the dynamic brake is applied.

- Operation sequence

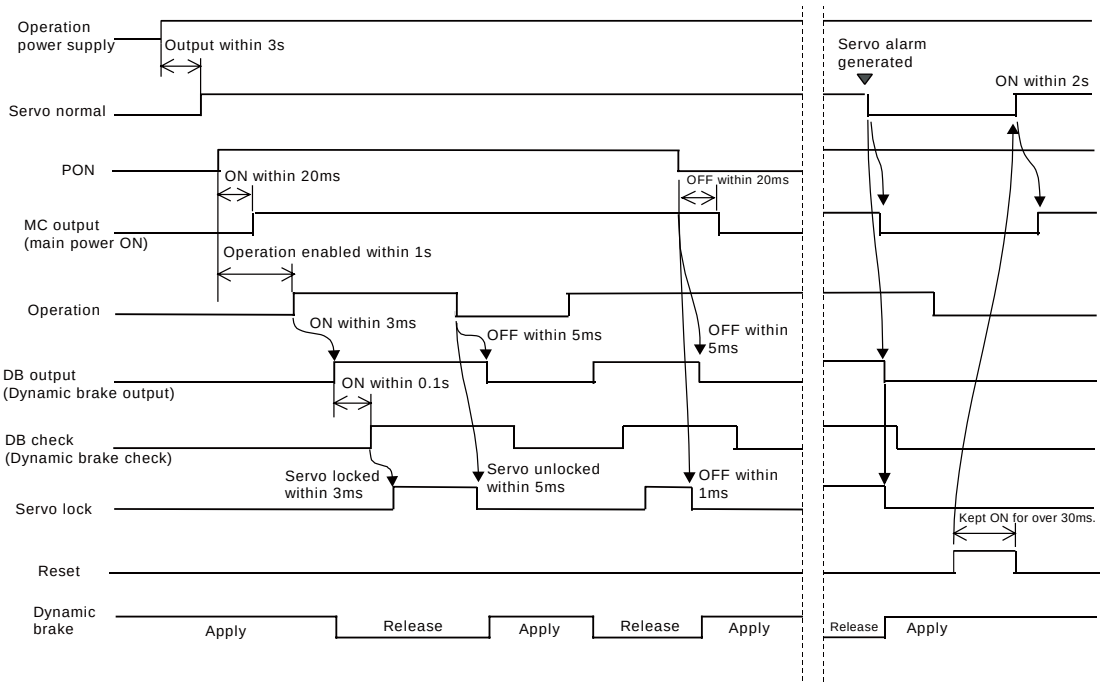

⚠ **CAUTION**	⚠ Shift to the sequence to turn off the operation signal after the servo normal signal has turned off. Otherwise, it is dangerous because servo lock is effected immediately after resetting.

- Wiring

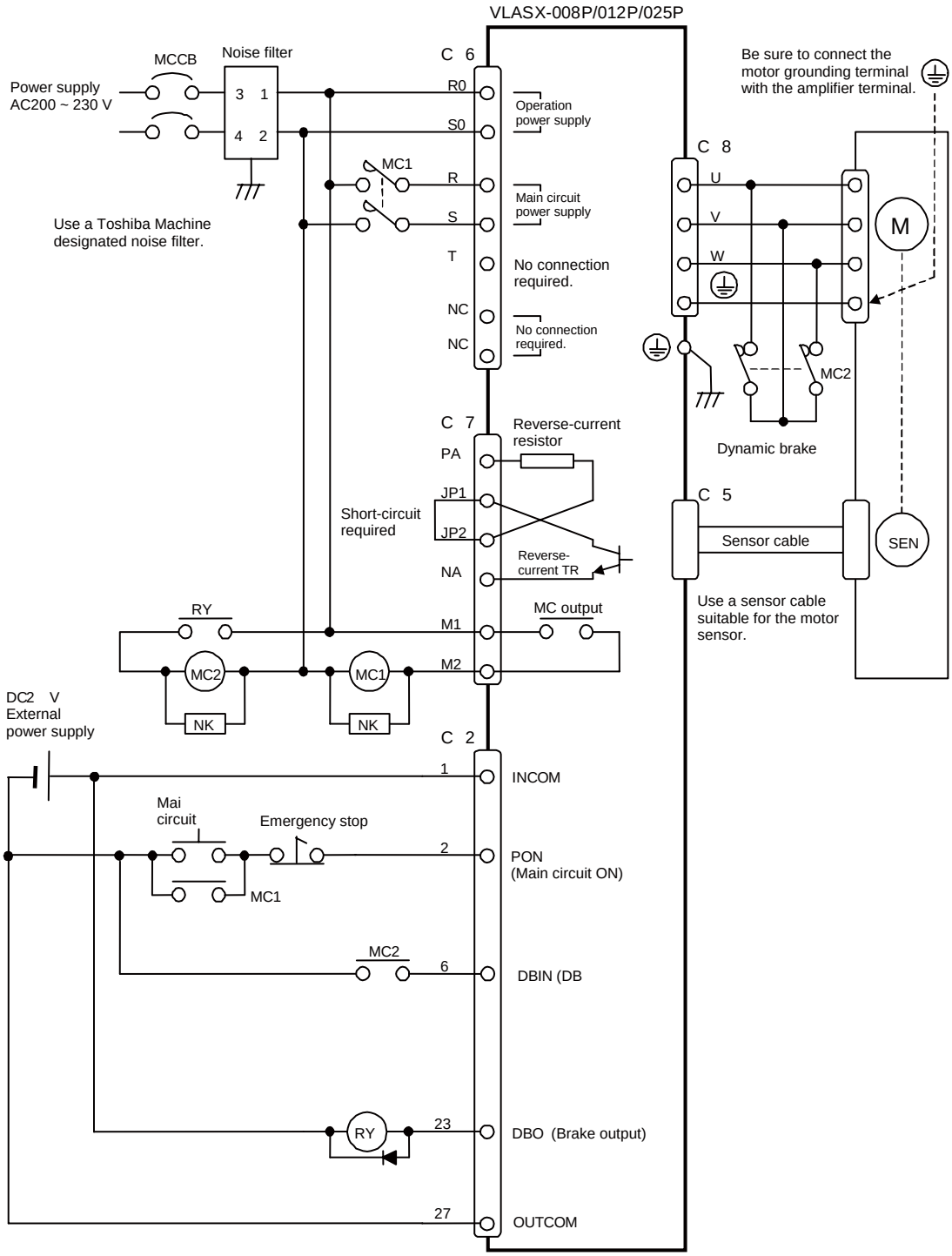
VLASX-008P/012P/025P
MCCB
Noise filter
Power supply
AC200 ~ 230 V
3 1
4 2
Use a Toshiba Machine
designated noise filter.
C 6
R0
S0
R
S
T
NC
NC
Operation
power supply
Main circuit
power supply
No connection
required.
No connection
required.
MC1
C 7
PA
JP1
JP2
NA
M1
M2
Reverse-current
resistor
Short-circuit
required
Reverse-
current TR
MC output
RY
MC2
MC1
NK
NK
DC2 V
External
power supply
C 2
1
2
6
23
27
INCOM
PON
(Main circuit ON)
DBIN (DB
DBO (Brake output)
OUTCOM
Mai
circuit
Emergency stop
MC1
MC2
RY
Be sure to connect the
motor grounding terminal
with the amplifier terminal.
C 8
U
V
W
M
MC2
Dynamic brake
C 5
Sensor cable
SEN
Use a sensor cable
suitable for the motor
sensor.

Note 1: Separate the power supply and motor armature wiring from the motor sensor cable.

Note 2: Be sure to connect the motor grounding terminal with the amplifier grounding terminal to ground the servo amplifier.

Note 3: Attach a surge killer to the contactor and relay coils to prevent influence of noise.

(4) When both holding brake (MB) and dynamic brake (DB) are used:

Note 1: Make sure that the sequence I/O includes “MB check”, “DB check”, “MB brake output” and “DB brake output.” Unless the MB and DB operation is confirmed, an alarm (AL14: brake error) will generate. Particular care is required when the special sequence is selected by user parameter UP46 (sequence I/O selection).

Note 2: When you stop operation, the speed starts reducing, and when the speed falls below the brake ON level, the holding brake is applied. Then the servo is unlocked with the DB rake applied.

Note 3: It is possible to specify the revolution speed at which the holding brake is applied by user parameter UP14 (brake ON speed). The holding brake will not turn on unless the speed falls below the set level.

Note 4: Immediately after PON has turned off or when an alarm has generated, the servo is unlocked and both the holding brake and dynamic brake are applied.

Relevant user parameter	
Brake ON revolution speed UP14	0.0 ~ 100.0 %

- Operation sequence

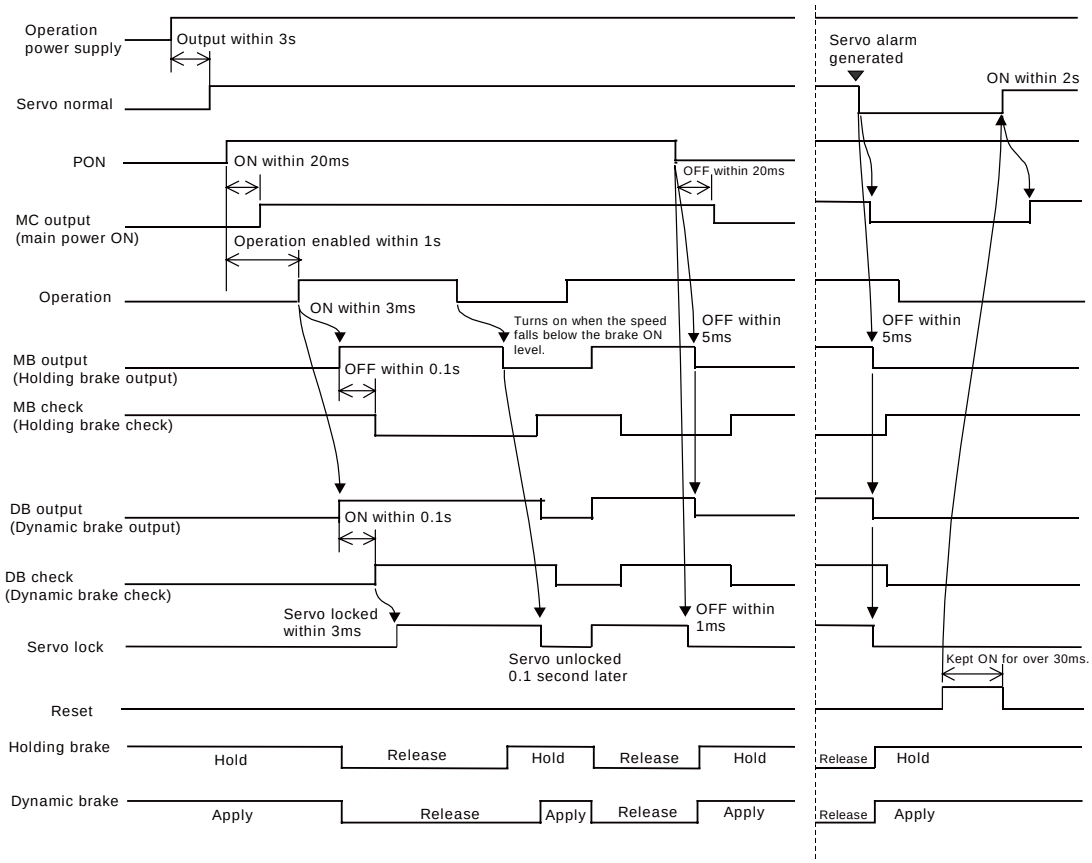

⚠ **CAUTION**	⚠ Shift to the sequence to turn off the operation signal after the servo normal signal has turned off. Otherwise, it is dangerous because servo lock is effected immediately after resetting.

- Wiring

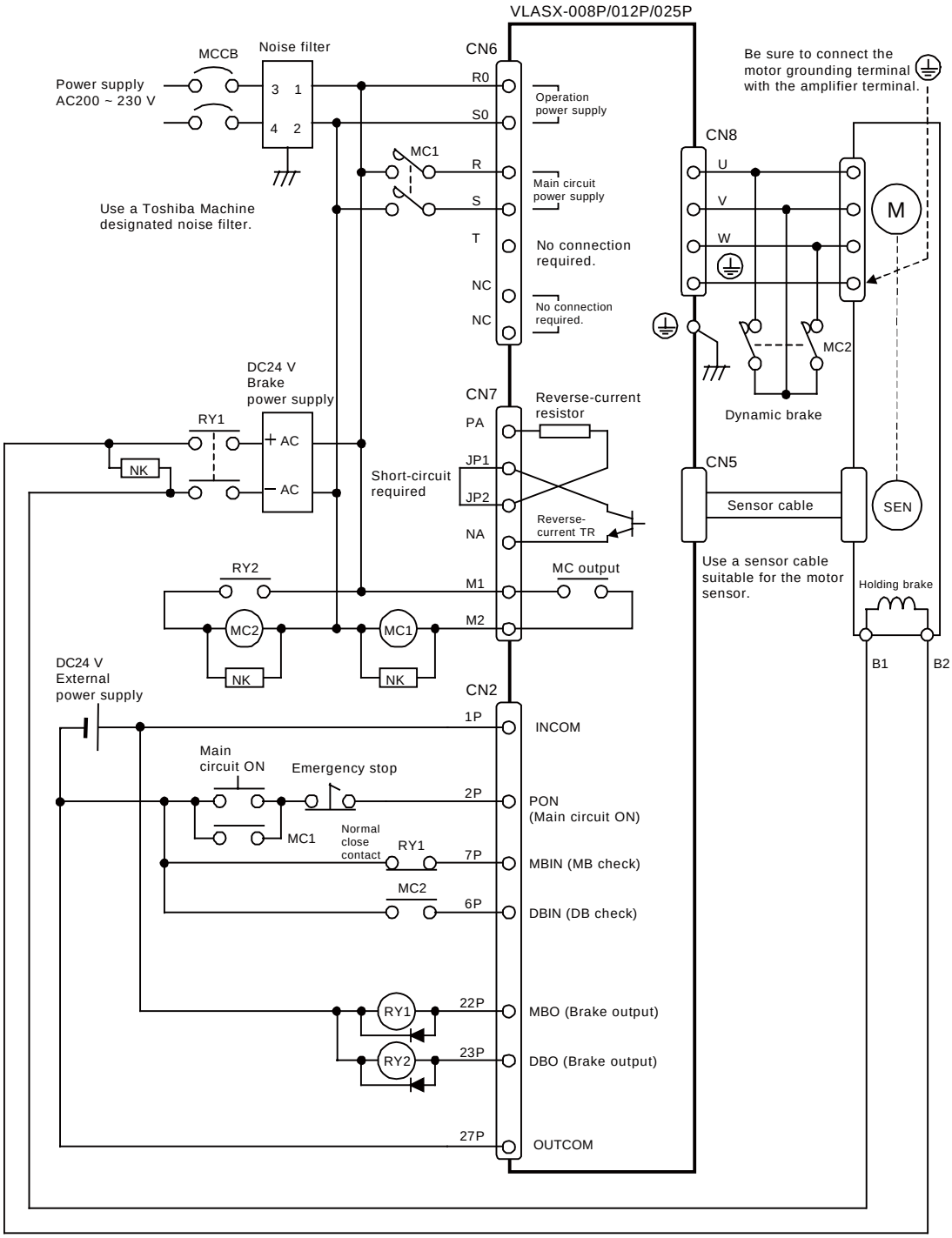
VLASX-008P/012P/025P
MCCB
Noise filter
Power supply
AC200 ~ 230 V
3 1
4 2
Use a Toshiba Machine
designated noise filter.
CN6
R0
S0
R
S
T
NC
NC
MC1
Operation
power supply
Main circuit
power supply
No connection
required.
No connection
required.
Be sure to connect the
motor grounding terminal
with the amplifier terminal.
CN8
U
V
W
M
MC2
Dynamic brake
DC24 V
Brake
power supply
RY1
+ AC
− AC
NK
CN7
PA
JP1
JP2
NA
M1
M2
Reverse-current
resistor
Short-circuit
required
Reverse-
current TR
CN5
Sensor cable
SEN
Use a sensor cable
suitable for the motor
sensor.
Holding brake
B1
B2
RY2
MC output
MC2
MC1
NK
NK
DC24 V
External
power supply
CN2
1P
INCOM
Main
circuit ON
Emergency stop
2P
PON
(Main circuit ON)
MC1
Normal
close
contact
RY1
7P
MBIN (MB check)
MC2
6P
DBIN (DB check)
RY1
22P
MBO (Brake output)
RY2
23P
DBO (Brake output)
27P
OUTCOM

Note 1: Separate the power supply and motor armature wiring from the motor sensor cable.

Note 2: Be sure to connect the motor grounding terminal with the amplifier grounding terminal to ground the servo amplifier.

Note 3: Attach a surge killer to the contactor and relay coils to prevent influence of noise.

2.1.2 VLASX–035P3, 070P3, 100P3, 200P3, 320P3, 500P3, 400P4

(1) When neither holding brake nor dynamic brake is used:

- Operation sequence

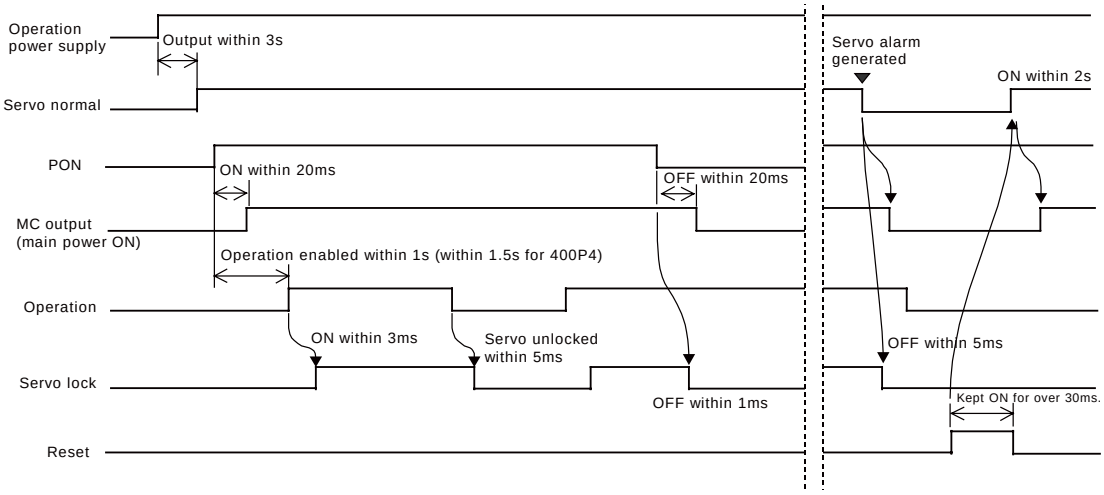

⚠ **CAUTION**	⚠ Shift to the sequence to turn off the operation signal after the servo normal signal has turned off. Otherwise, it is dangerous because servo lock is effected immediately after resetting.

- Wiring (VLASX–035P3, 070P3, 100P3, 200P3)

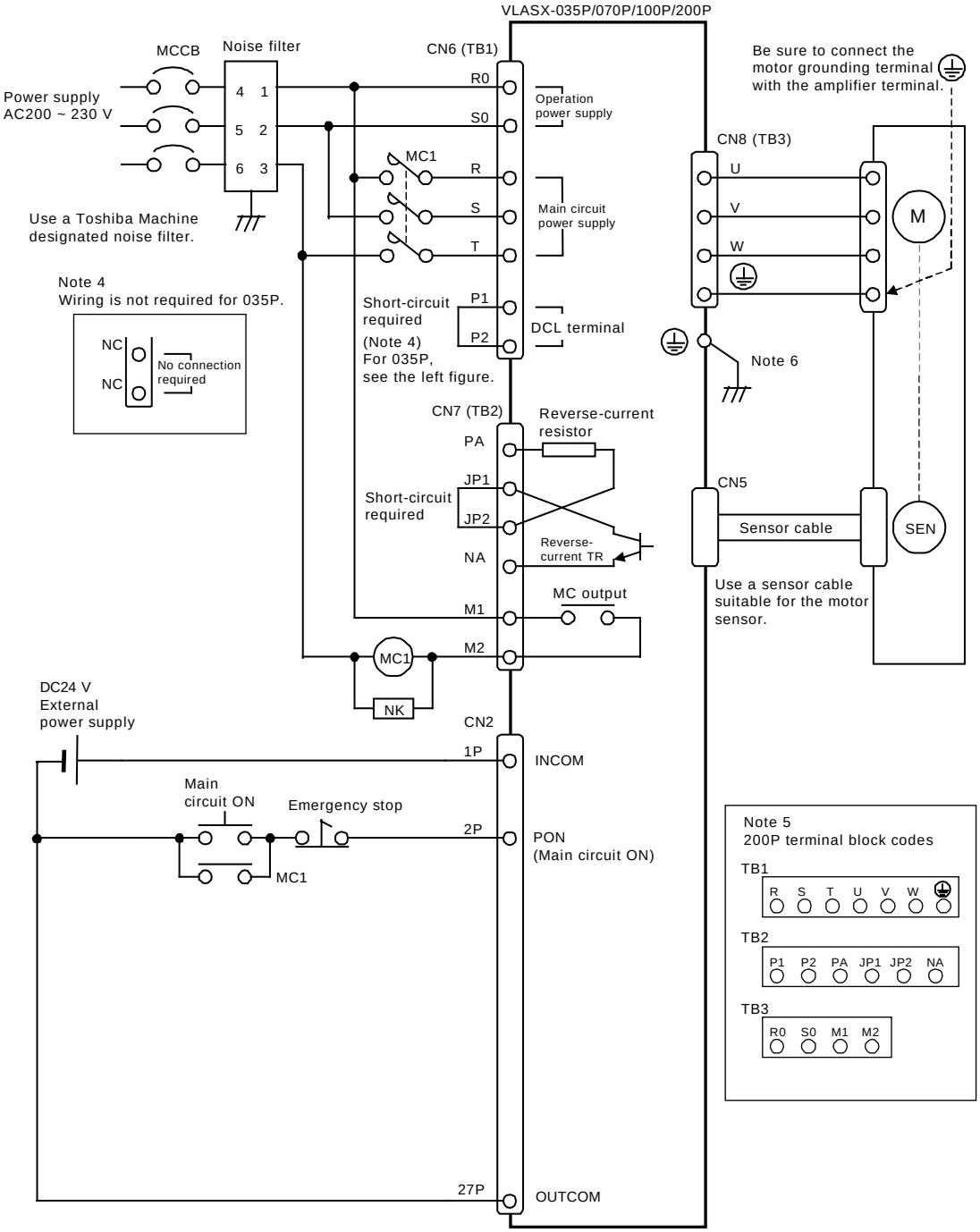

Note 1: Separate the power supply and motor armature wiring from the motor sensor cable.

Note 2: Be sure to connect the motor grounding terminal with the amplifier grounding terminal to ground the servo amplifier.

Note 3: Attach a surge killer to the contactor and relay coils to prevent influence of noise.

Note 4: A DCL terminal can be included between P1 and P2 terminals for the purpose of improving power-factor and suppressing harmonic wave. (Motor capacity: Below 4 kW)
(Only for 070P, 100P and 200P. For 035P, connect an ACL terminal to the input.)

Note 5: CN6, 7 and 8 are connector numbers for 035P and 070P. Codes for 100P are parenthesized, and those for 200P are shown in another table.

Note 6: Connect the 200P grounding terminal to the TB1 terminal block.

! **CAUTION**	⚠ If motor armature wires U, V and W are connected wrongly, the motor may go uncontrollable. To avoid this, check for the connections and perform a test run before starting an operation.

- Wiring (VLASX–320P3, 500P3)

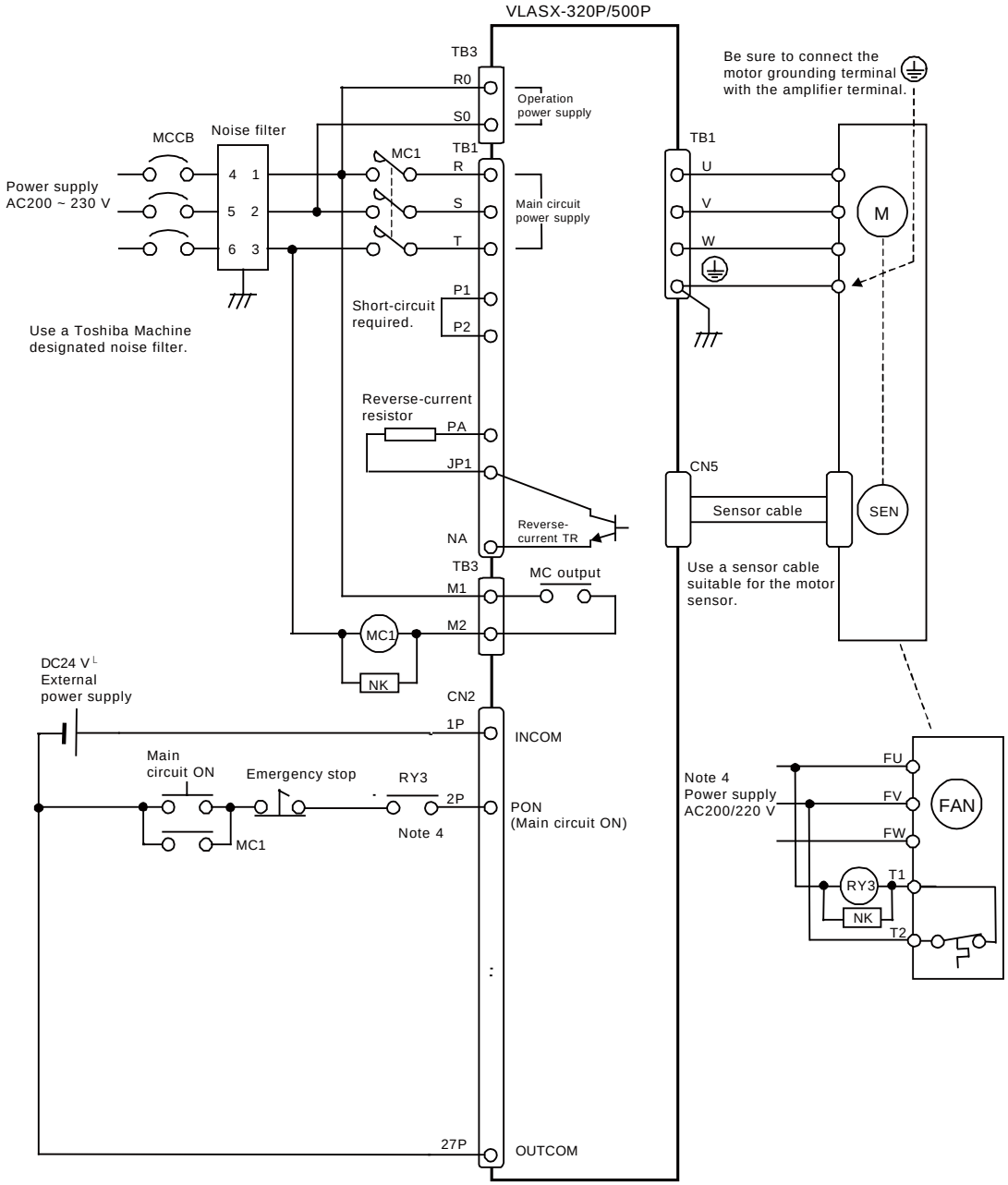

Note 1: Separate the power supply and motor armature wiring from the motor sensor cable.

Note 2: Be sure to connect the motor grounding terminal with the amplifier grounding terminal to ground the servo amplifier.

Note 3: Attach a surge killer to the contactor and relay coils to prevent influence of noise.

Note 4: When the motor is attached with a fan, perform wiring for the motor thermo switch and cooling fan.

CAUTION	If motor armature wires U, V and W are connected wrongly, the motor may go uncontrollable. To avoid this, check for the connections and perform a test run before starting an operation.

CAUTION	The power supply should be connected only to the R, S or T terminal. Otherwise, a fire may be caused.

- Wiring (VLASX–400P4)

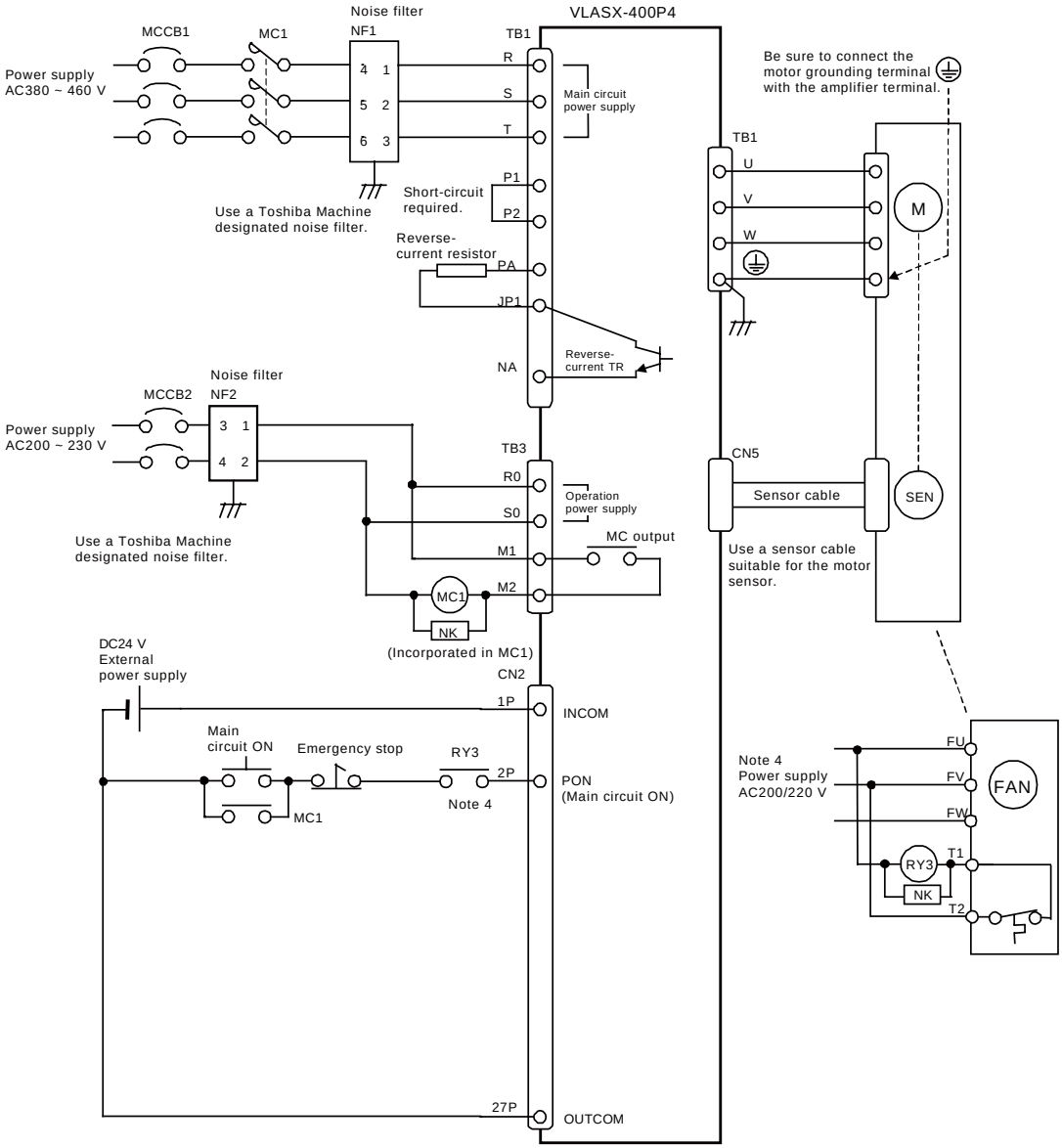

Note 1: Separate the power supply and motor armature wiring from the motor sensor cable.

Note 2: Be sure to connect the motor grounding terminal with the amplifier grounding terminal to ground the servo amplifier.

Note 3: Attach a surge killer to the contactor and relay coils to prevent influence of noise.

Note 4: When the motor is attached with a fan, perform wiring for the motor thermo switch and cooling fan.

CAUTION	If motor armature wires U, V and W are connected wrongly, the motor may go uncontrollable. To avoid this, check for the connections and perform a test run before starting an operation.

CAUTION	The power supply should be connected only to the R, S or T terminal. Otherwise, a fire may be caused.

(2) When the holding brake (MB) is used:

Note 1: Make sure that the sequence I/O includes “MB check” and “MB output.” Unless the MB operation is confirmed, an alarm (AL14: brake error) will generate. Particular care is required when the special sequence is selected by user parameter UP46 (sequence I/O selection).

Note 2: When you stop operation, the speed starts reducing, and when the speed falls below the brake ON level, the servo is unlocked with the holding brake applied. The holding brake operation setting is specified by user parameter UP13. When UP13 = 00, the deceleration time becomes zero (0) and the holding brake starts working when the actual speed slows down to below the brake ON speed (UP14).
When UP13 = 01, the speed decelerates along a deceleration curve selected then and the holding brake starts working when the actual speed slows down to below the brake ON speed.

Note 3: It is possible to specify the revolution speed at which the holding brake is applied by user parameter UP14 (brake ON speed). This parameter is intended for avoiding the use of the holding brake as the speed control brake and prevents the holding brake ON until the speed falls below the set level.

Note 4: Immediately after PON has turned off or when an alarm has generated, the servo is unlocked and the brake is applied. DO NOT turn off the PON frequently during operation.

Relevant user parameter	
Holding brake operation UP13	00 or 01
Brake ON revolution speed UP14	0.0 ~ 100.0 %

- Operation sequence

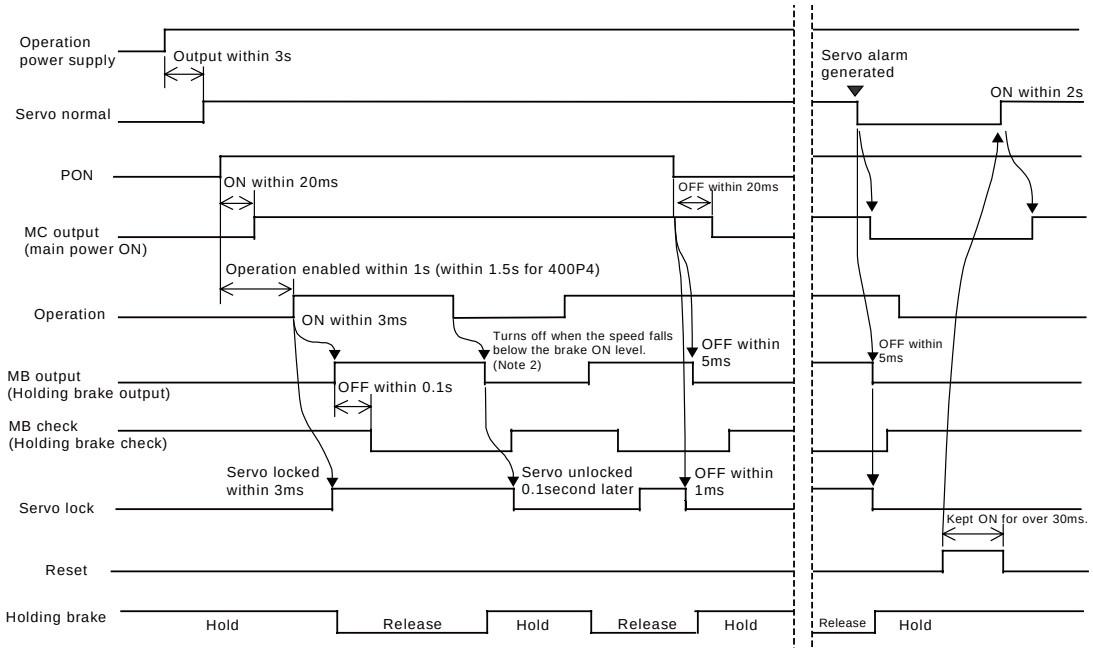

⚠ **CAUTION**	⚠ Shift to the sequence to turn off the operation signal after the servo normal signal has turned off. Otherwise, it is dangerous because servo lock is effected immediately after resetting.

- Wiring (VLASX–035P3, 070P3, 100P3, 200P3)

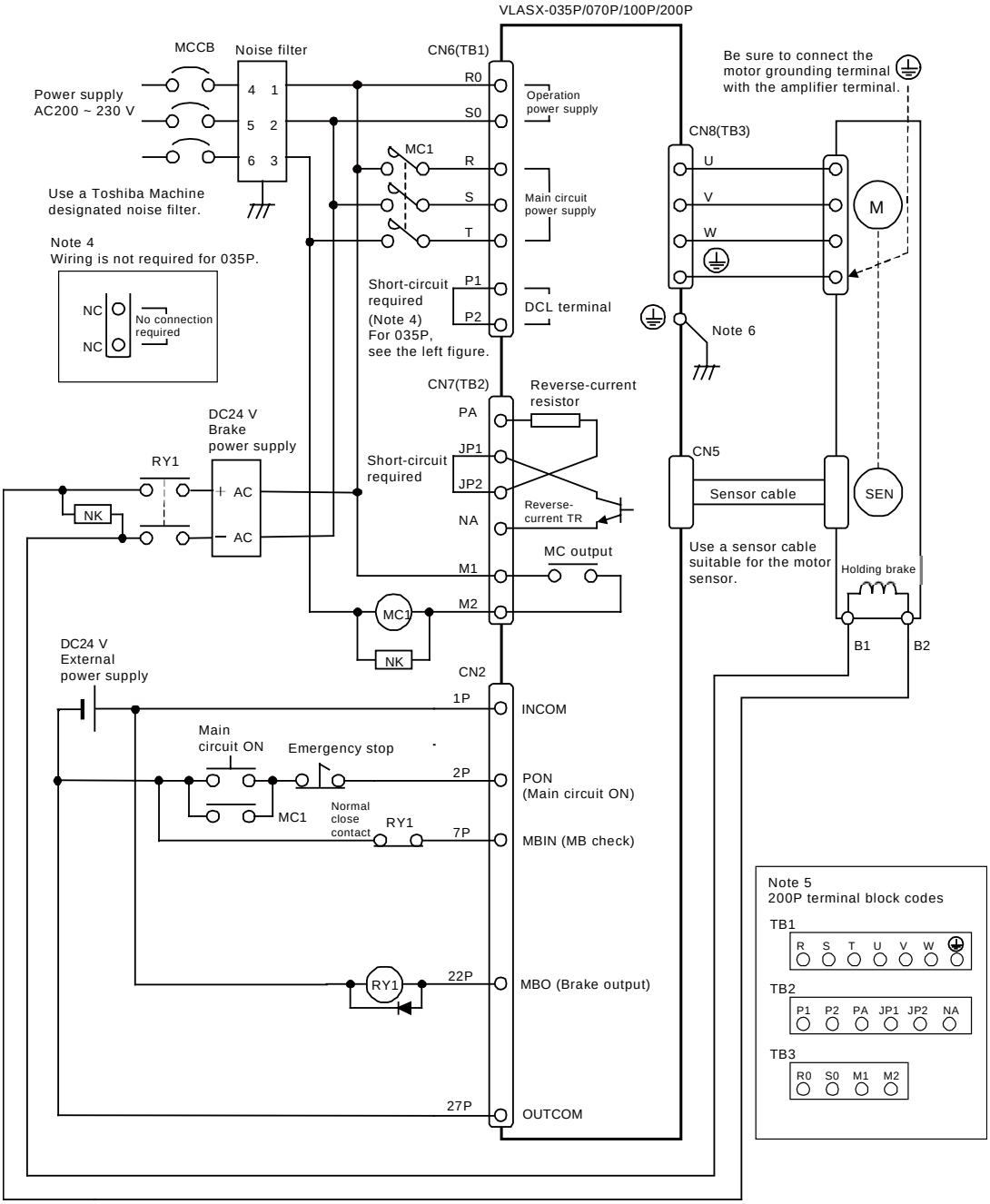

Note 1: Separate the power supply and motor armature wiring from the motor sensor cable.

Note 2: Be sure to connect the motor grounding terminal with the amplifier grounding terminal to ground the servo amplifier.

Note 3: Attach a surge killer to the contactor and relay coils to prevent influence of noise.

Note 4: A DCL terminal can be included between P1 and P2 terminals for the purpose of improving power-factor and suppressing harmonic wave. (Motor capacity: Below 4 kW)
(Only for 070P, 100P and 200P. For 035P, connect an ACL terminal to the input.)

Note 5: CN6, 7 and 8 are connector numbers for 035P and 070P. Codes for 100P are parenthesized, and those for 200P are shown in another table.

Note 6: Connect the 200P grounding terminal to the TB1 terminal block.

! **CAUTION**	⚠ If motor armature wires U, V and W are connected wrongly, the motor may go uncontrollable. To avoid this, check for the connections and perform a test run before starting an operation.

- Wiring (VLASX–320P3, 500P3)

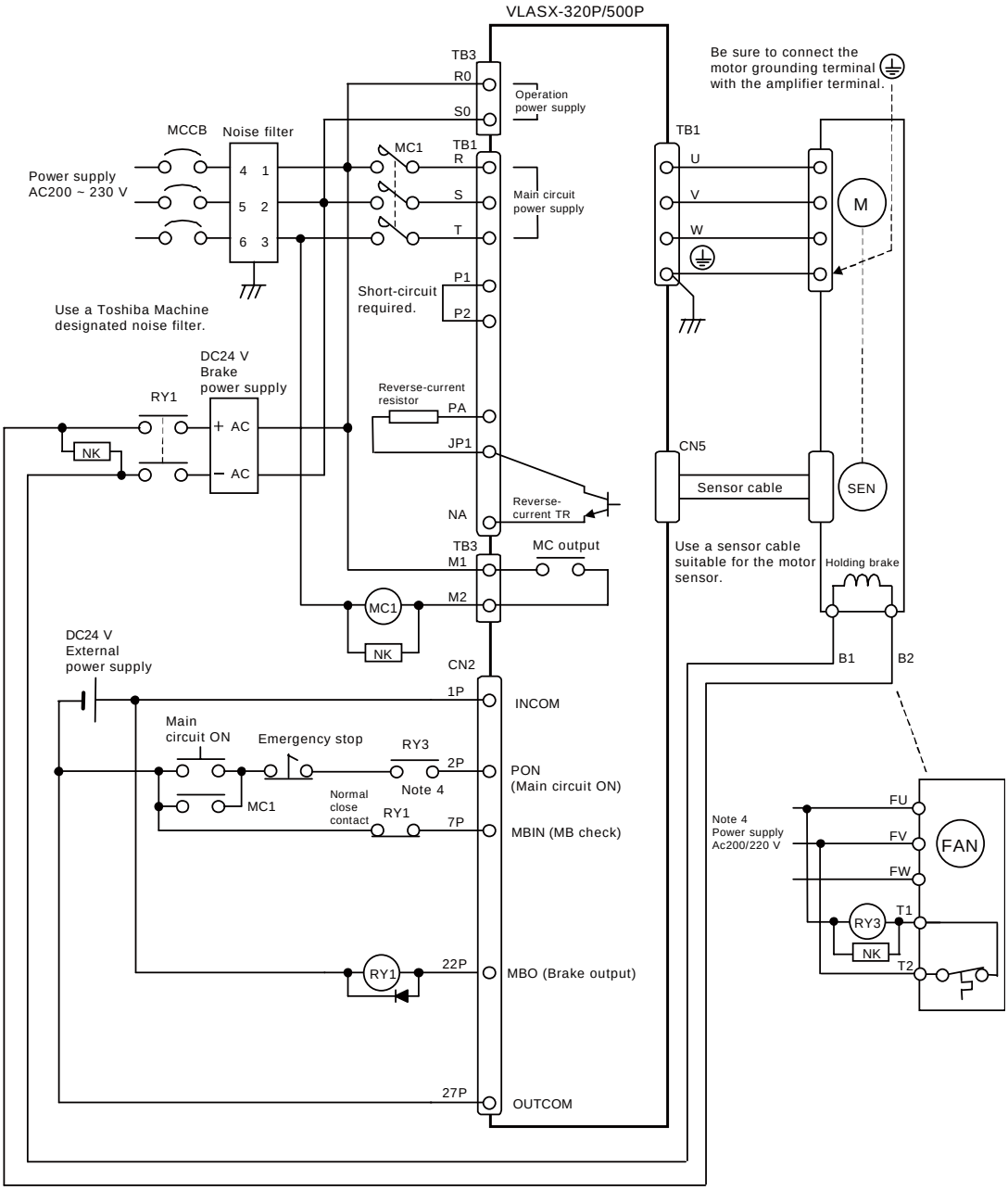

Note 1: Separate the power supply and motor armature wiring from the motor sensor cable.

Note 2: Be sure to connect the motor grounding terminal with the amplifier grounding terminal to ground the servo amplifier.

Note 3: Attach a surge killer to the contactor and relay coils to prevent influence of noise.

Note 4: When the motor is attached with a fan, perform wiring for the motor thermo switch and cooling fan.

CAUTION	The power supply should be connected only to the R, S or T terminal. Otherwise, a fire may be caused.

- Wiring (VLASX–400P4)

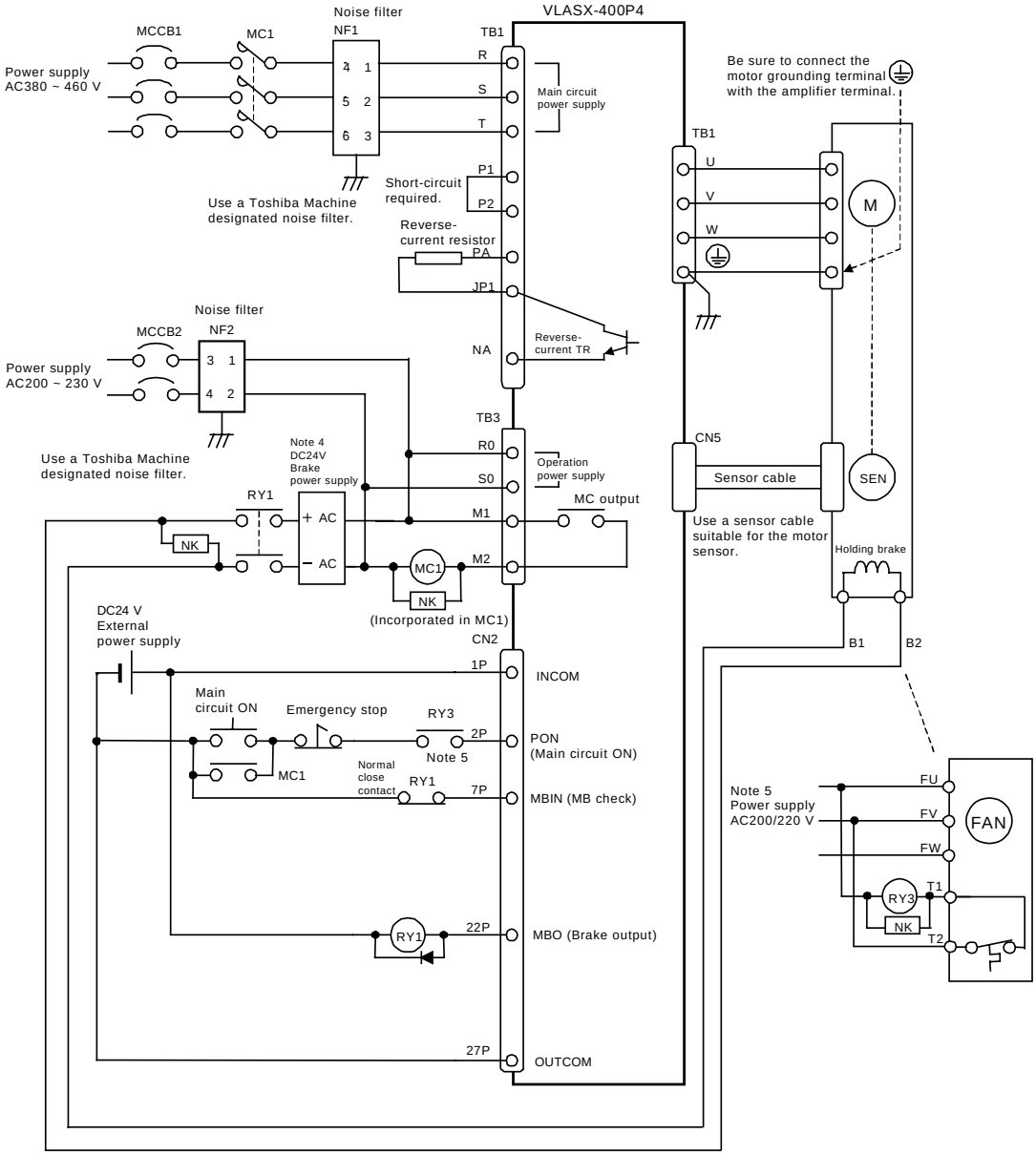

Note 1: Separate the power supply and motor armature wiring from the motor sensor cable.

Note 2: Be sure to connect the motor grounding terminal with the amplifier grounding terminal to ground the servo amplifier.

Note 3: Attach a surge killer to the contactor and relay coils to prevent influence of noise.

Note 4: Wiring when the motor brake voltage is 24 V. Use a power supply suited for the brake voltage.

Note 5: When the motor is attached with a fan, perform wiring for the motor thermo switch and cooling fan.

CAUTION	The power supply should be connected only to the R, S or T terminal. Otherwise, a fire may be caused.

(3) When the dynamic brake (DB) is used:

Note 1: Make sure that the sequence I/O includes “DB check” and “DB output.” Unless the DB operation is confirmed, an alarm (AL14: brake error) will generate. Particular care is required when the special sequence is selected by user parameter UP46 (sequence I/O selection).

Note 2: Immediately after operation has stopped, the servo is unlocked and the dynamic brake is applied.

Note 3: Immediately after PON has turned off or when an alarm has generated, the servo is unlocked and the dynamic brake is applied.

- Operation sequence

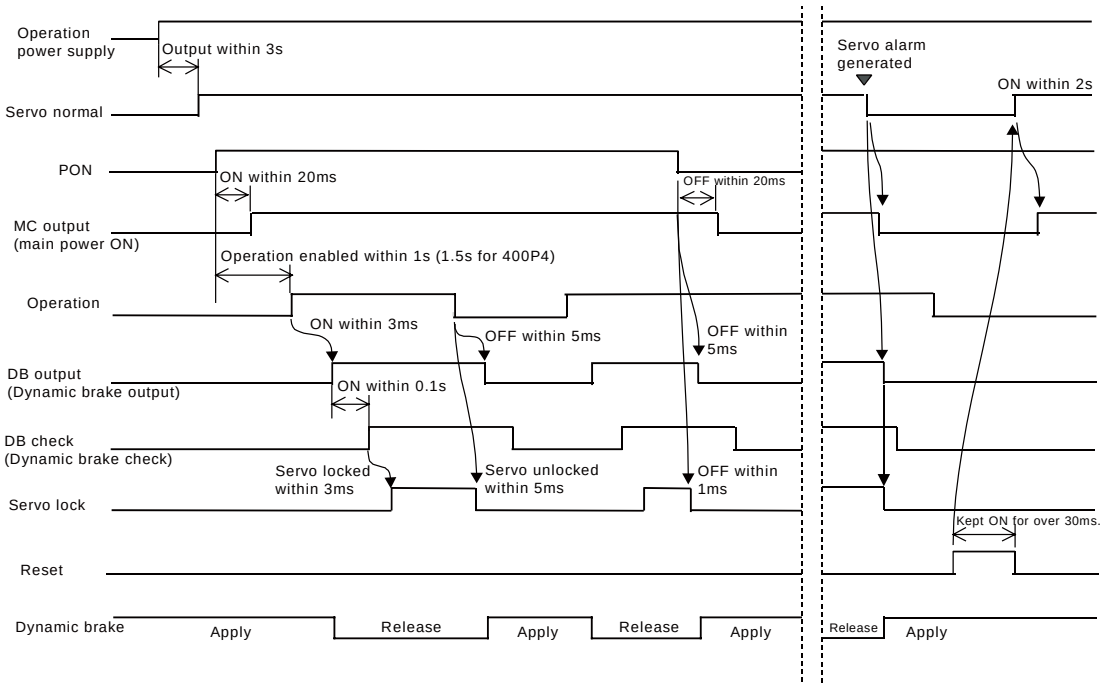

⚠ **CAUTION**	⚠ Shift to the sequence to turn off the operation signal after the servo normal signal has turned off. Otherwise, it is dangerous because servo lock is effected immediately after resetting.

- Wiring (VLASX–035P3, 070P3, 100P3, 200P3)

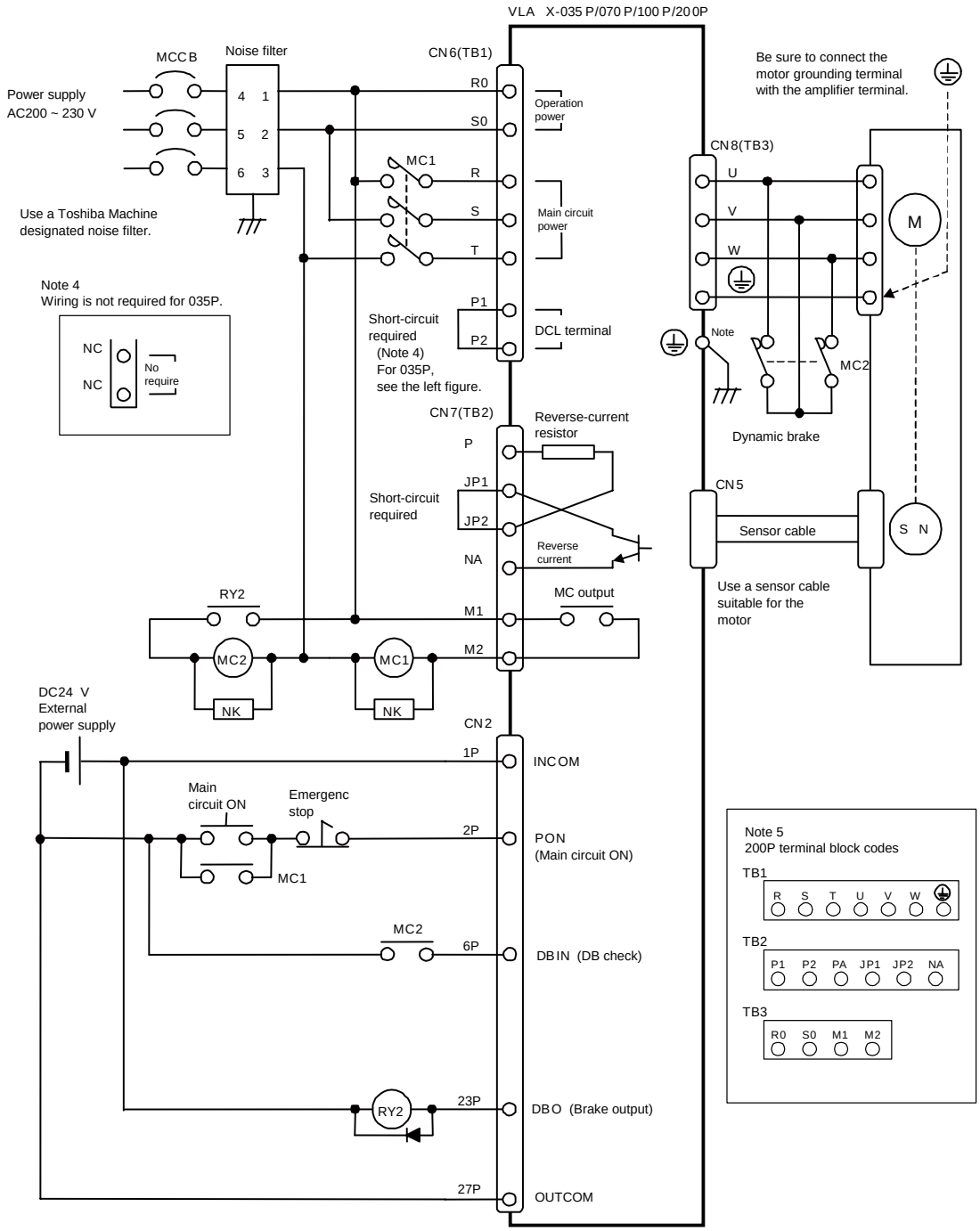

Note 1: Separate the power supply and motor armature wiring from the motor sensor cable.

Note 2: Be sure to connect the motor grounding terminal with the amplifier grounding terminal to ground the servo amplifier.

Note 3: Attach a surge killer to the contactor and relay coils to prevent influence of noise.

Note 4: A DCL terminal can be included between P1 and P2 terminals for the purpose of improving power-factor and suppressing harmonic wave. (Motor capacity: Below 4 kW)
(Only for 070P, 100P and 200P. For 035P, connect an ACL terminal to the input.)

Note 5: CN6, 7 and 8 are connector numbers for 035P and 070P. Codes for 100P are parenthesized, and those for 200P are shown in another table.

Note 6: Connect the 200P grounding terminal to the TB1 terminal block.

- Wiring (VLASX–320P3, 500P3)

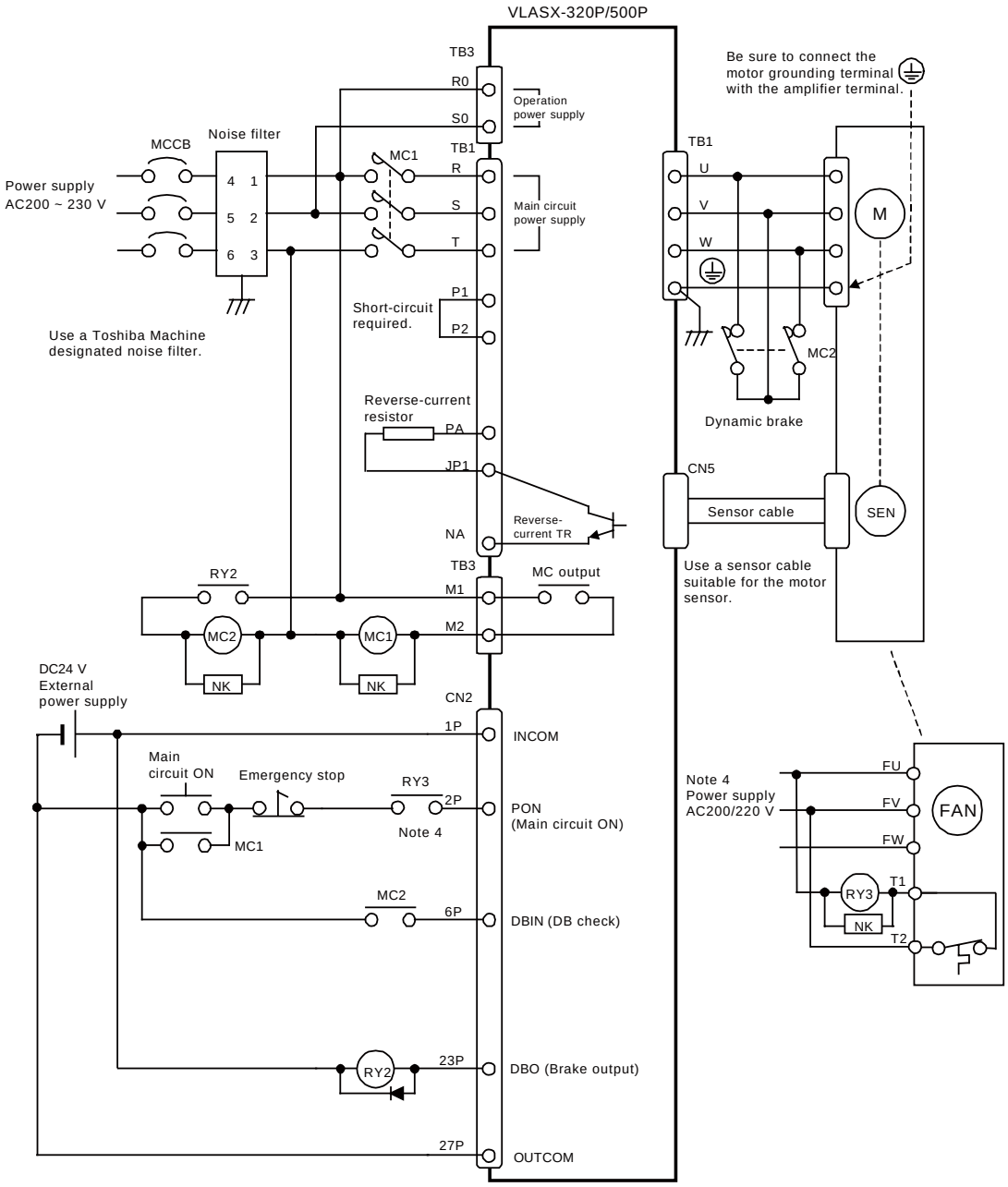

Note 1: Separate the power supply and motor armature wiring from the motor sensor cable.

Note 2: Be sure to connect the motor grounding terminal with the amplifier grounding terminal to ground the servo amplifier.

Note 3: Attach a surge killer to the contactor and relay coils to prevent influence of noise.

Note 4: When the motor is attached with a fan, perform wiring for the motor thermo switch and cooling fan.

CAUTION	If motor armature wires U, V and W are connected wrongly, the motor may go uncontrollable. To avoid this, check for the connections and perform a test run before starting an operation.

CAUTION	The power supply should be connected only to the R, S or T terminal. Otherwise, a fire may be caused.

- Wiring (VLASX–400P4)

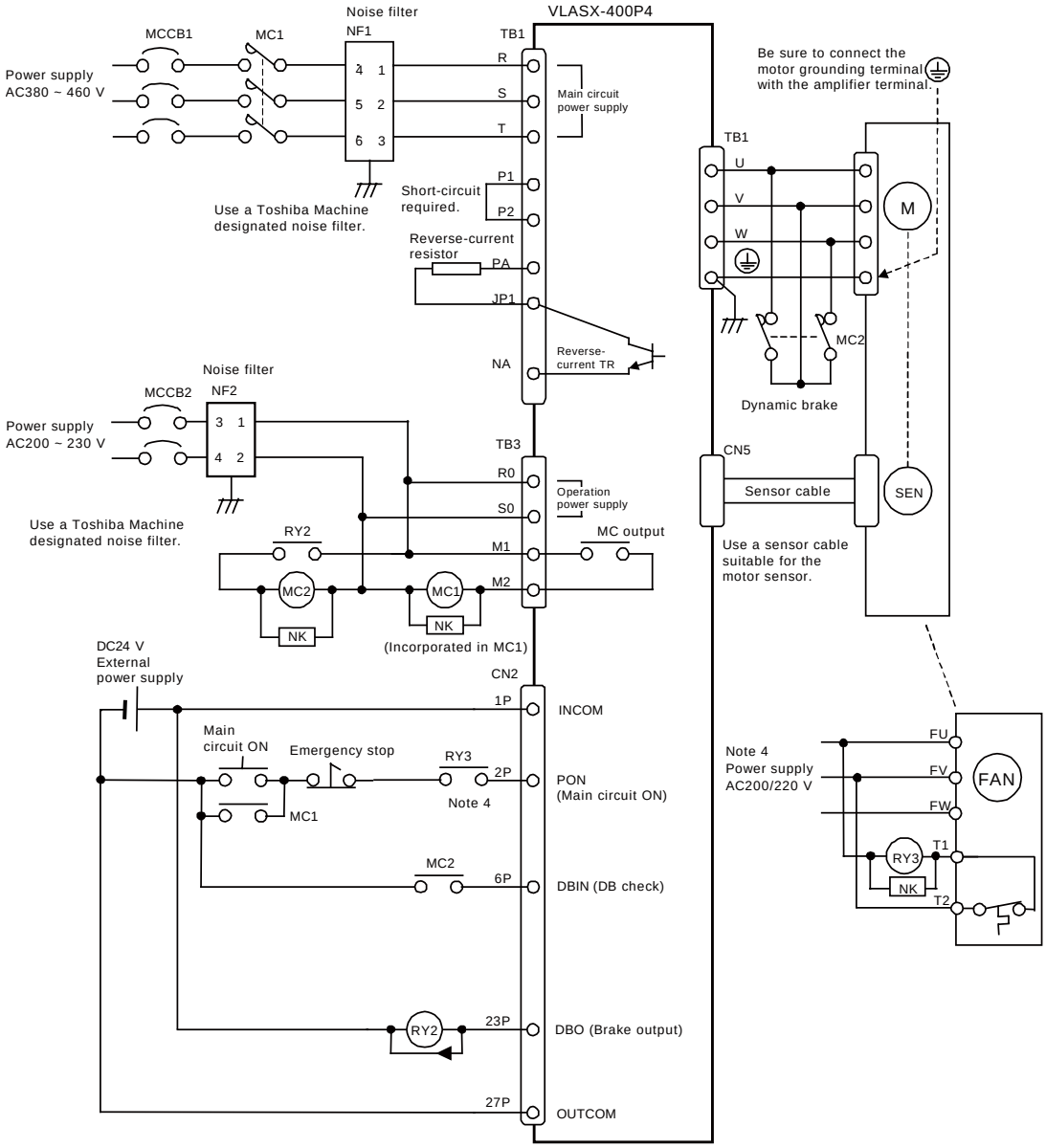

Note 1: Separate the power supply and motor armature wiring from the motor sensor cable.

Note 2: Be sure to connect the motor grounding terminal with the amplifier grounding terminal to ground the servo amplifier.

Note 3: Attach a surge killer to the contactor and relay coils to prevent influence of noise.

Note 4: When the motor is attached with a fan, perform wiring for the motor thermo switch and cooling fan.

CAUTION	If motor armature wires U, V and W are connected wrongly, the motor may go uncontrollable. To avoid this, check for the connections and perform a test run before starting an operation.

CAUTION	The power supply should be connected only to the R, S or T terminal. Otherwise, a fire may be caused.

(4) When both holding brake (MB) and dynamic brake (DB) are used:

Note 1: Make sure that the sequence I/O includes “MB check”, “DB check”, “MB output” and “DB output.” Unless the MB and DB operation is confirmed, an alarm (AL14: brake error) will generate. Particular care is required when the special sequence is selected by user parameter UP46 (sequence I/O selection).

Note 2: When you stop operation, the speed starts reducing, and when the speed falls below the brake ON level, the holding brake is applied. Then the servo is unlocked with the DB rake applied.

Note 3: It is possible to specify the revolution speed at which the holding brake is applied by user parameter UP14 (brake ON speed). The holding brake will not turn on unless the speed falls below the set level.

Note 4: Immediately after PON has turned off or when an alarm has generated, the servo is unlocked and both the holding brake and dynamic brake are applied.

Relevant user parameter	
Brake ON revolution speed UP14	0.0 ~ 100.0 %

- Operation sequence

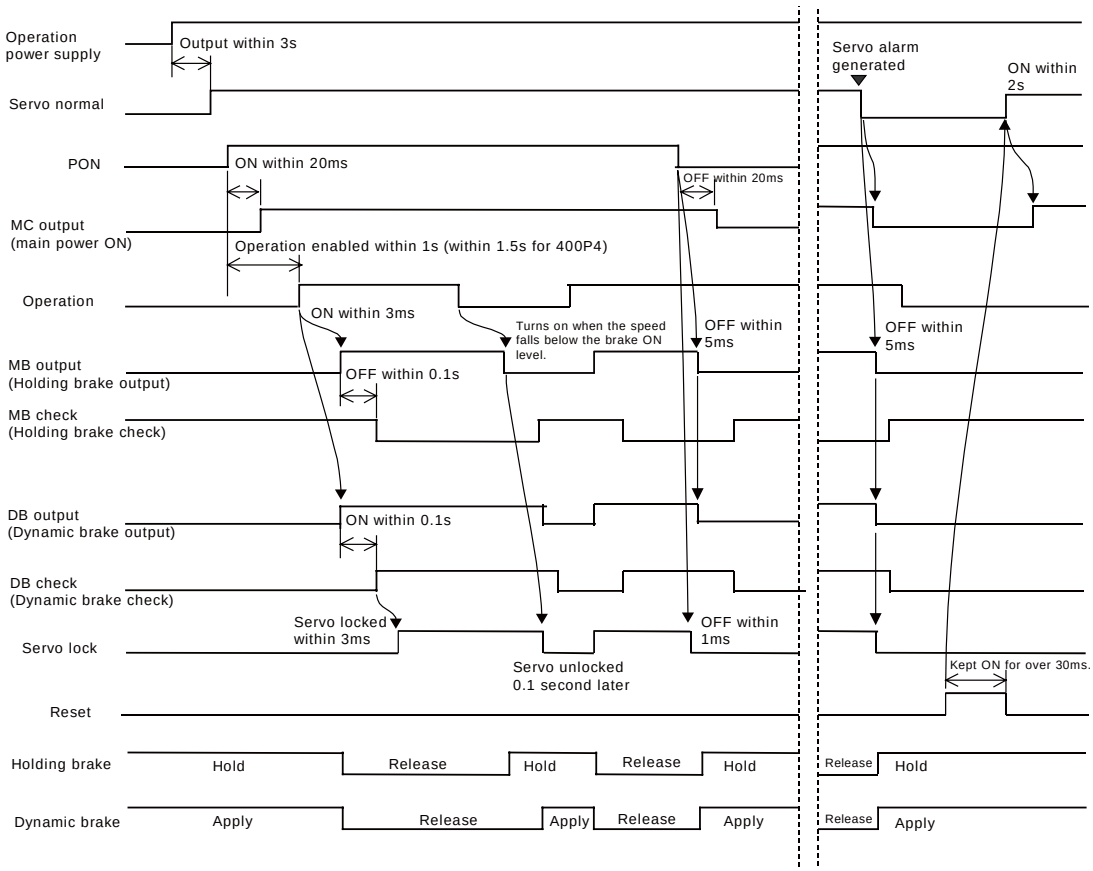

⚠ **CAUTION**	⚠ Shift to the sequence to turn off the operation signal after the servo normal signal has turned off. Otherwise, it is dangerous because servo lock is effected immediately after resetting.

- Wiring (VLASX–035P3, 070P3, 100P3, 200P3)

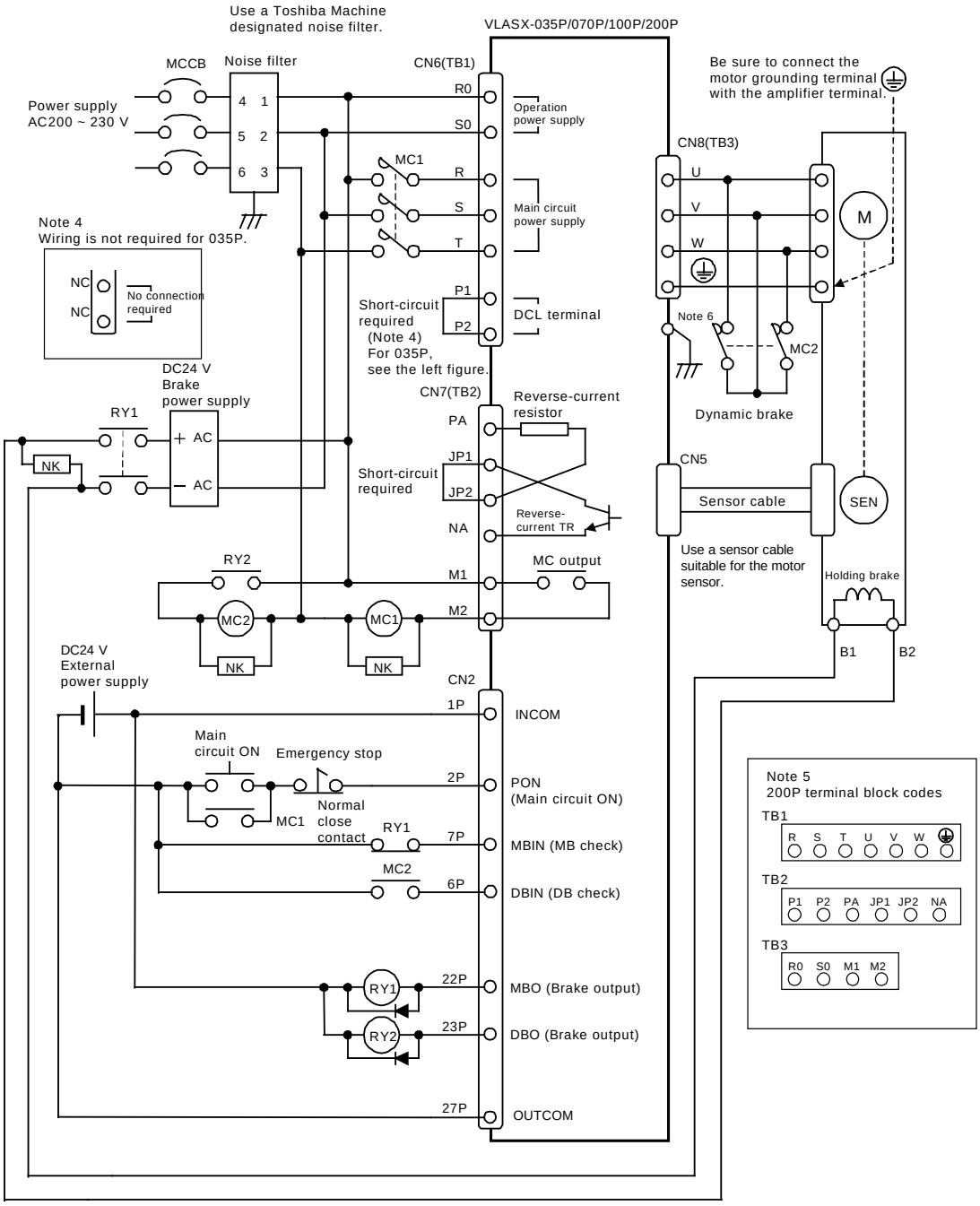

Note 1: Separate the power supply and motor armature wiring from the motor sensor cable.

Note 2: Be sure to connect the motor grounding terminal with the amplifier grounding terminal to ground the servo amplifier.

Note 3: Attach a surge killer to the contactor and relay coils to prevent influence of noise.

Note 4: A DCL terminal can be included between P1 and P2 terminals for the purpose of improving power-factor and suppressing harmonic wave. (Motor capacity: Below 4 kW)
(Only for 070P, 100P and 200P. For 035P, connect an ACL terminal to the input.)

Note 5: CN6, 7 and 8 are connector numbers for 035P and 070P. Codes for 100P are parenthesized, and those for 200P are shown in another table.

Note 6: Connect the 200P grounding terminal to the TB1 terminal block.

- Wiring (VLASX–320P3, 500P3)

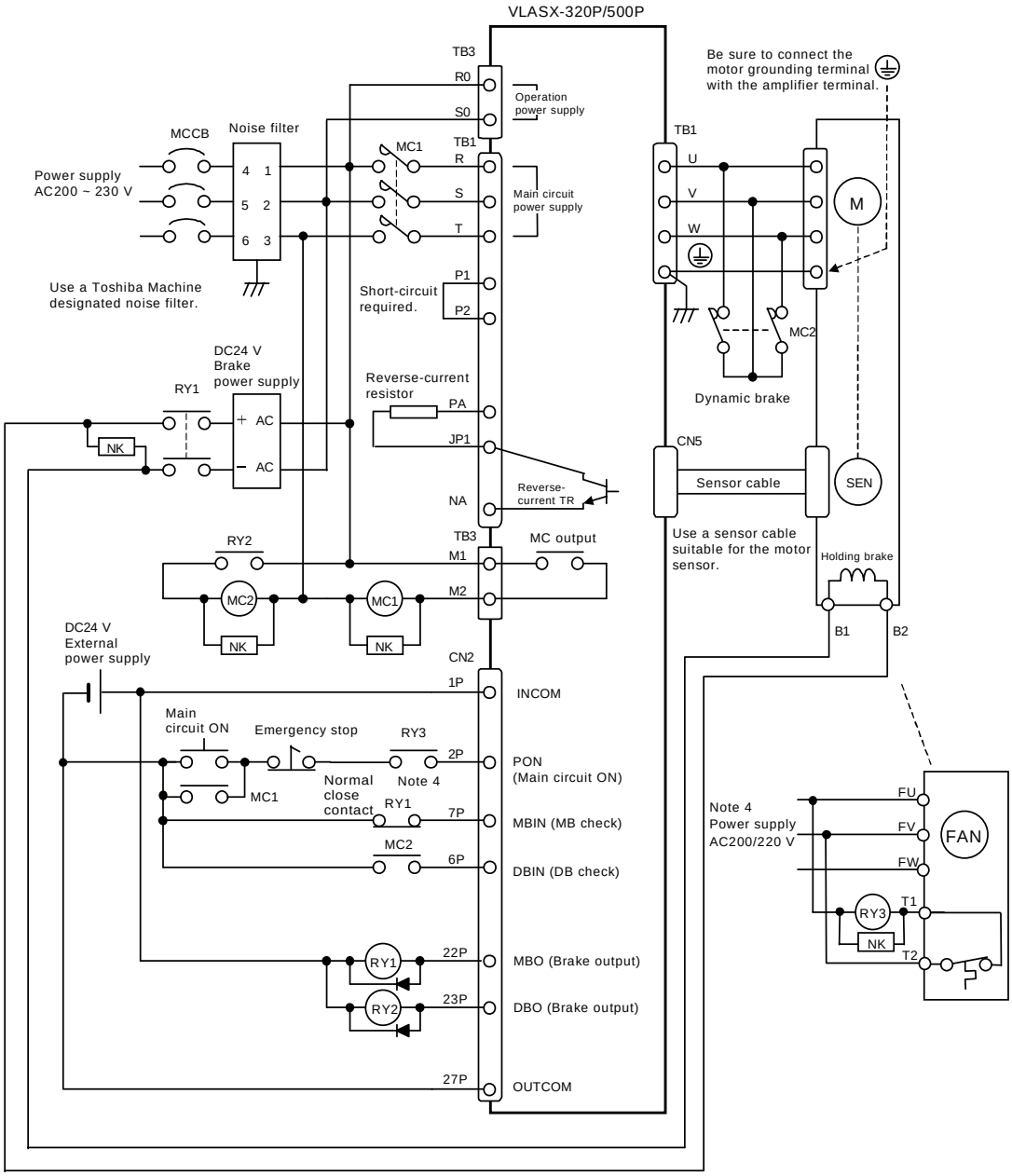

Note 1: Separate the power supply and motor armature wiring from the motor sensor cable.

Note 2: Be sure to connect the motor grounding terminal with the amplifier grounding terminal to ground the servo amplifier.

Note 3: Attach a surge killer to the contactor and relay coils to prevent influence of noise.

Note 4: When the motor is attached with a fan, perform wiring for the motor thermo switch and cooling fan.

! **CAUTION**	⚠ If motor armature wires U, V and W are connected wrongly, the motor may go uncontrollable. To avoid this, check for the connections and perform a test run before starting an operation.

- Wiring (VLASX–400P4)

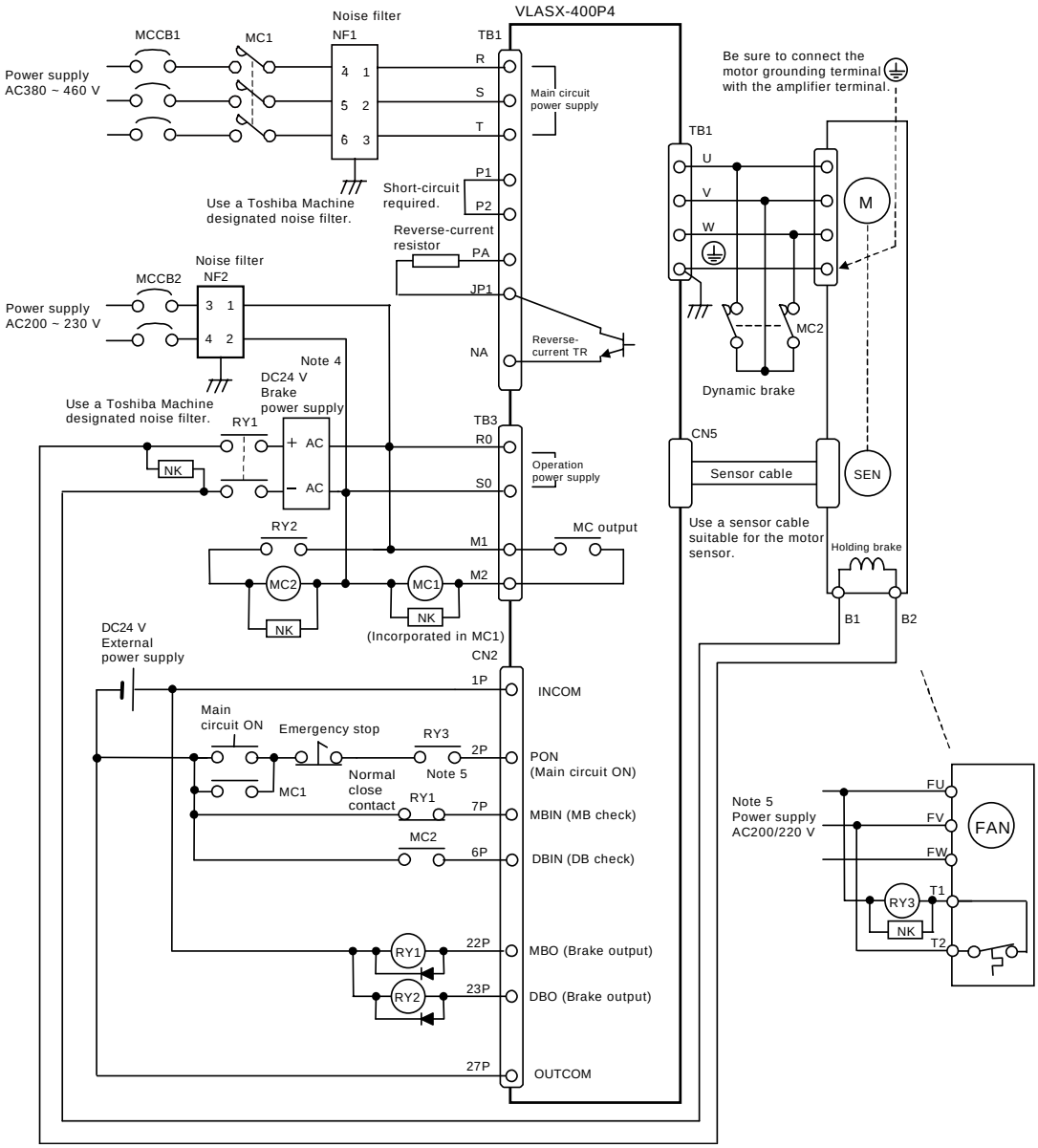

Note 1: Separate the power supply and motor armature wiring from the motor sensor cable.

Note 2: Be sure to connect the motor grounding terminal with the amplifier grounding terminal to ground the servo amplifier.

Note 3: Attach a surge killer to the contactor and relay coils to prevent influence of noise.

Note 4: Wiring when the motor brake voltage is 24 V. Use a power supply suited for the brake voltage.

Note 5: When the motor is attached with a fan, perform wiring for the motor thermo switch and cooling fan.

⚠ **CAUTION**	⚠ If motor armature wires U, V and W are connected wrongly, the motor may go uncontrollable. To avoid this, check for the connections and perform a test run before starting an operation.

2.2 Selecting Peripheral Equipment

Motor type VLBS	Applicable amp. VLASX–	Breaker MCCB (Fuji Electric)	Noise filter (TDK)	Contactor MC1 (Fuji Electric)	Noise killer NF (Nisshin)	Relay RY1 ~ RY3 (OMRON)	Brake power supply (Cosel)	Contactor MC2
V–ZA00330	008P2	SA32B–3A	ZRAC2206 –11	SC–03 1a AC 200 V	SQ250 50NF	MY4N–D2 DC 24 V	P15E– 24–N	SH–4 2a2b AC 200 V (Fuji Electric)
V–ZA00530								
V–ZA01030								
V–ZA02030								
V–ZA04030	012P2							
V–05015		SA32B –10A					P30E– 24–N	
V–ZA06030	025P2		ZRAC2210 –11				P15E– 24–N	
V–ZA07530								
V–10015	035P3	SA33B –10A	ZRWT221 0–ME				P30E– 24–N	
V–10030								
V–15015								
V–18030	070P3	SA33B –15A	ZRWT222 0–ME					
V–20015								
V–24030								
V–30015		SA33B –20A						
V–30030								
V–45030	100P3	SA33B –30A	ZRWT223 0–ME	SC–4–1 1a AC 200 V				B–N20 AC 200 V 3b (Mitsubishi Electric)
V–50015								
V–70030	200P3	SA53B –40A	ZRCT505 0–MF	SC–N1 2a2b AC 200 V				
V–75015								
V–10K30		SA53B –50A						
V–ZA11K15		SA63B –60A	ZRCT508 0–MF	SC–N2 2a2b AC 200 V			P50E– 24–N	
V–ZA14K15	320P3	SA103BA –75A		SC–N3 2a2b AC 200 V				B–N65 AC 200 V 3b (Mitsubishi Electric)
G–A20K20		SA203BA –125A	ZRCT515 0–MF	SC–N5 2a2b AC 200 V			Confirm motor spec.	
G–A33K20	500P3	SA203BA –200A	ZRCT520 0–MF	SC–N7 2a2b AC 200 V				
G–B55K20	400P4	1: SA203 BA–150A 2: SA32B –10A	1: ZRCT51 50–MF 2: ZRAC22 10–11	SC–N6 2a2b AC 200 V				

℅ Selection criteria for multiple axes

When you wish to use one (1) no fuse breaker for multiple amplifiers, calculate the primary side alternate current from the following expression and determine a required capacity.

- Single phase (008P2, 012P2, 025P2)

  $I = (2.5 \times P + Ps) \div V$ [A]

- Three (3) phases (035P3, 070P3, 100P3, 200P3, 320P3, 500P3, 400P4)

  $I = \left(\frac{1.7 \times P}{\sqrt{3}} + Ps \right) \div V$ [A]

2.5, 1.7 : Coefficient of efficiency and power-factor

P : Aggregate total of motor output [W]

Ps : Aggregate total of control power capacity [VA]

V : Master power voltage [V]

Amplifier model VLASX–	Control power capacity (VA)
008P2	50
012P2	50
025P2	50
035P3	65
070P3	80
100P3	80
200P3	100
320P3	150
500P3	150
400P4	350

2.3 Wire Diameter

Motor type VLBS	Applicable amp. VLASX-	Main circuit (RST)	Motor output (UVWE)	Operation circuit (R0-S0)	MCON (M1–M2)	Reverse-current resistance (PA-JP1)	Dynamic brake	Holding brake (B1,B2)	DC input (PA-NA) (Note 2)	DCL (P1–P2) (Note 3)
V–ZA00330	008P2	AWG20	AWG20	AWG20	AWG20	AWG20	AWG20	AWG20	AWG20	None
V–ZA00530										
V–ZA01030										
V–ZA02030										
V–ZA04030	012P2									
V–05015								AWG18		
V–ZA06030	025P2	AWG16				AWG16	AWG16	AWG20	AWG16	
V–ZA07530			AWG16							
V–10015	035P3							AWG18		
V–10030										
V–15015										
V–18030	070P3		AWG14	AWG16	AWG16					AWG16
V–20015										
V–24030										
V–30015		AWG14				AWG14			AWG14	AWG14
V–30030										
V–45030	100P3	AWG12	AWG12			AWG12	AWG14		AWG12	AWG12
V–50015								AWG16		
V–70030	200P3	AWG10	AWG8			AWG10	AWG10		AWG10	AWG10
V–75015										
V–10K30		AWG8							AWG8	AWG8
V–ZA11K15		AWG6	AWG6			AWG8			AWG6	AWG6
V–ZA14K15	320P3	AWG4	AWG4			AWG6			AWG4	
G–A20K20		AWG2	AWG2			AWG4	AWG6		AWG2	
G–A33K20	500P3	AWG2/0	AWG2/0			AWG0	AWG2		AWG2/0	
G–B55K20	400P4	AWG1/0	AWG1/0			AWG0	AWG2			

Note 1: The criterion for determining wire size is shown below. If the conditions differ, consider the reduction rate of permissible wire current.

- UL1430, UL1015 (AWG10–20), UL1283 (AWG2–8) and UL1284 (AWG0, 1/0, 2/0) wires:
  When the rated current runs through three (3) bundled lead wires at ambient temperature of 40°C. (Maximum permissible temperature of wire: 105°C)
- Motor output (UVW) and holding brake (B1–B2):
  When the wire length is 60 m or less.

Note 2: Wires given in the column are required only when DC280 V is input to the PA–NA terminal, and should not be connected for AC input (RST terminal). If both terminals are connected, the equipment will be damaged.

Note 3: For 070P3, 100P3, 200P3, 320P3, 500P3 and 400P4, terminals P1 and P2 are provided to connect a DCL terminal to improve power-factor and suppress harmonic wave.

2.4 Reverse-Current Absorption Resistor

During motor speed slowdown or absorption operation (while loaded with a pulley), the reverse-current energy will rise the DC master power voltage in the amplifier. To prevent this, a reverse-current absorption circuit is provided. The reverse-current absorption circuit is designed to consume the reverse-current energy with a resistor (*1) equipped in the amplifier. When the reverse-current energy increases, heat generated by the internal resistance exceeds the permissible range, and the protective circuits of overvoltage (AL02), reverse-current absorption resistor overheat (AL09) and reverse-current absorption error (AL10) will function. The reverse-current absorption capacity can be expanded by adding an external resistor.

(*1) Not incorporated in the 320P3, 500P3 and 400P4. Mount an external resistor.

2.4.1 Selection of External Resistor

The value of reverse-current energy is defined by a load and an operation pattern. An excessive energy amount to be absorbed by an external resistor is obtained by subtracting machine loss, motor internal loss, amplifier power consumption, amplifier power source charging capacity, and energy to be absorbed by the internal reverse-current absorption resistor. Convert the energy amount thus figured out to a value per unit time period to obtain the wattage (W) for the external reverse-current absorption resistor.

- Horizontal axis

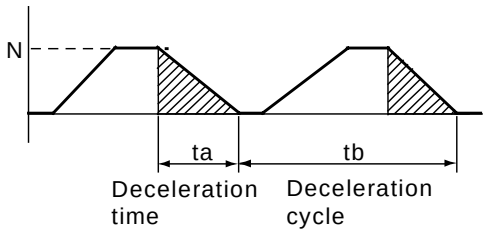

Reverse-current energy	$Ej = \frac{1}{2} \times (Jm + J_L) \times \left(\frac{2\pi N}{60}\right)^2$	(J)
Total of various losses and charging capacity	$Es = \left(\frac{\pi N}{60} \times T_L + Pm + Pa\right) \times ta + Ec$	(J)
Reverse-current power	$Pra = \frac{Ej - Es}{tb}$	(W)

where,

Jm:	Motor inertia	(kg·m^2)	……	See our specifications.
JL:	Load inertia	(kg·m^2)		
π:	Ratio of circumstance of circle to its diameter, 3.14			
N:	rpm at the time of deceleration			
TL:	Load torque	(N·m)		
Pm:	Motor loss	(W)	……	10 % of motor capacity
Pa:	Amplifier power consumption	(W)	……	See the table below.
Ec:	Amplifier power source charging capcity	(J)	……	See the table below.
ta:	Deceleration time	(s)		
tb:	Deceleration cycle	(s)		

Amplifier reverse-current absorption capacity

Amplifier model VLASX–	Power consumption Pa (W)	Internal reverse-current absorption resistance Er (W)	Charging capacity Ec (J)
008P2	16	20	5.4
012P2	22	20	5.4
025P2	27	30	8.0
035P3	40	60	8.0
070P3	70	80	16
100P3	140	100	26
200P3	200	180	76
320P3	440	0	153
500P3	780	0	305
400P4	1500	0	350

Example 1: Use of motor VLBSV–ZA04030 and amplifier VLASX–012P2

$$Ej = \frac{1}{2} \times (0.34 + 1.2) \times 10^{-4} \times \left(\frac{2\pi \times 3000}{60} \right)^2 = 7.6 \qquad \text{(J)}$$

$$Es = \left(\frac{\pi \times 3000}{60} \times 0.13 + 40 + 22 \right) \times 0.035 + 5.4 = 8.3 \qquad \text{(J)}$$

$$Pra = \frac{7.6 - 8.3}{0.1} = -7 \qquad \text{(W)}$$

Absorption is possible because the internal reverse-current absorption resistance of 012P2 is 20 (W). No external reverse-current absorption resistor is required.
User parameters UP21 and UP22 are factory-set to “0”, respectively.

User parameter setting:
UP21 0
UP22 0

Jm:	Motor inertia	0.34×10^{-4} (kg·m^2)
JL:	Load inertia	1.2×10^{-4} (kg·m^2)
π:	Ratio of circumstance of circle to its diameter	3.14
N:	rpm at the time of deceleration	3000 (min^{-1})
TL:	Load torque	0.13 (N·m)
Pm:	Motor loss	40 (W)
Pa:	Amplifier power consumption	22 (W)
Ec:	Amplifier power source charging capcity	5.4 (J)
ta:	Deceleration time	0.035 (s)
tb:	Deceleration cycle	0.1 (s)

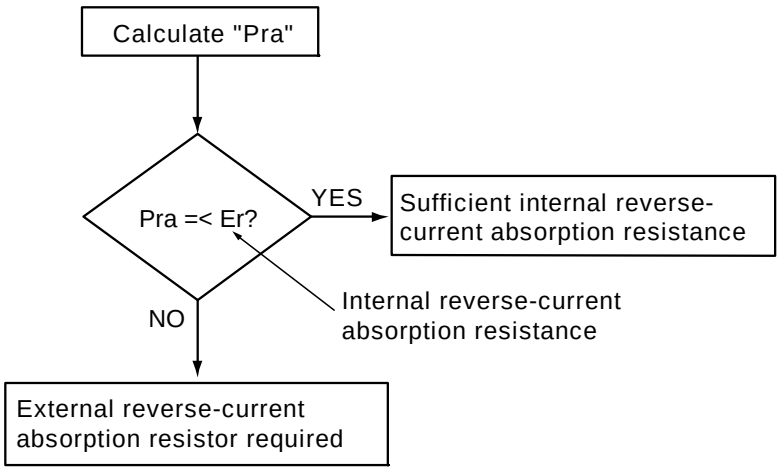

Example 2: Use of motor VLBSV–18030 and amplifier VLASX–070P3

$$Ej = \frac{1}{2} \times (12.9 + 13.0) \times 10^{-4} \times \left(\frac{2\pi \times 3000}{60} \right)^2 = 128 \qquad (J)$$

$$Es = \left(\frac{\pi \times 3000}{60} \times 0.6 + 180 + 70 \right) \times 0.05 + 16 = 33 \qquad (J)$$

$$Pra = \frac{128 - 33}{0.3} = 316 \qquad (W)$$

Because the internal resistance (Er) of 070P3 is 80 (W), an external reverse-current absorption resistor of over 316 (W) is required.
When using an optional reverse-current absorption resistor, its absorption capacity should be 400 (W).
If you select a resistor of 15 Ω and 400 W, specify user parameters UP21 and UP22 as shown below.

User parameter setting:
UP21 15.0 (Ω)
UP22 0.40 (kW)

Jm:	Motor inertia	12.9×10^{-4} (kg·m^2)
JL:	Load inertia	13.0×10^{-4} (kg·m^2)
π:	Ratio of circumstance of circle to its diameter	3.14
N:	rpm at the time of deceleration	3000 (min^{-1})
TL:	Load torque	0.6 (N·m)
Pm:	Motor loss	180 (W)
Pa:	Amplifier power consumption	70 (W)
Ec:	Amplifier power source charging capcity	16 (J)
ta:	Deceleration time	0.05 (s)
tb:	Deceleration cycle	0.3 (s)

- Vertical axis

  This is an example in which a workpiece is lowered by means of a pulley or a motor is used as a brake for tension control. In the expressions below, TL is load torque generated by friction and Tg is torque defined by workpiece mass and pulley diameter.

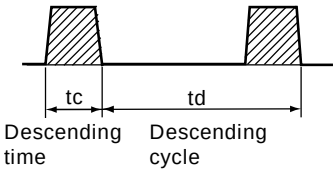

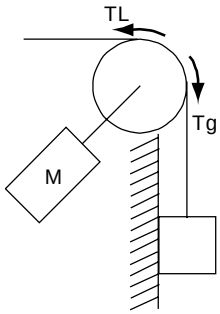

Reverse-current energy	$Ej = \frac{2\pi N}{60} \times Tg \times tc$	(J)
Total of various losses and charging capacity	$Es = \left(\frac{2\pi N}{60} \times T_L + Pm + Pa \right) \times tc + Ec$	(J)
Reverse-current power	$Pra = \frac{Ej - Es}{td}$	(W)

where,

N:	rpm during descending	(min^{-1})		
Tg:	Tare torque	(N·m)		
TL:	Load torque	(N·m)		
Pm:	Motor loss	(W)	……	10 % of motor capacity
Pa:	Amplifier power consumption	(W)	……	See the table below.
Ec:	Amplifier power source charging capacity	(J)	……	Assumed as zero (0). Note 1
Tc:	Descending time	(s)		
td:	Descending cycle	(s)		
π:	Ratio of circumstance of circle to its diameter, 3.14			

Note 1: It is assumed that in continuous absorption operation, the charging capacity of amplifier power source is not used effectively. Thus, Ec is taken as zero (0).

Amplifier reverse-current absorption capacity

Amplifier model VLASX–	Power consumption Pa (W)	Internal reverse-current absorption resistance Er (W)	Charging capacity Ec (J)
008P2	16	20	5.4
012P2	22	20	5.4
025P2	27	30	8.0
035P3	40	60	8.0
070P3	70	80	16
100P3	140	100	26
200P3	200	180	76
320P3	440	0	153
500P3	780	0	305
400P4	1500	0	350

Example 3: Use of motor VLBSV–ZA04030 and amplifier VLASX–012P2

$$Ej = \frac{2\pi \times 3000}{60} \times 0.5 + 0.2 = 31 \qquad \text{(J)}$$

$$Es = \left(\frac{2\pi \times 3000}{60} \times 0.13 + 40 + 22 \right) \times 0.2 + 0 = 21 \qquad \text{(J)}$$

$$Pra = \frac{31 - 21}{1} = 10 \qquad \text{(W)}$$

Absorption is possible because the internal reverse-current absorption resistance of 012P2 is 20 (W). No external reverse-current absorption resistor is required.
User parameters UP21 and UP22 are factory-set to “0”, respectively.

User parameter setting:

UP21 0

UP22 0

N:	rpm during descending	3000 (min^{-1})
Tg:	Tare torque	0.5 (N·m)
TL:	Load torque	0.13 (N·m)
Pm:	Motor loss	40 (W)
Pa:	Amplifier power consumption	22 (W)
Ec:	Amplifier power source charging capcity	5.4 (J)
Tc:	Descending time	0.2 (s)
td:	Descending cycle	1 (s)
π:	Ratio of circumstance of circle to its diameter	3.14

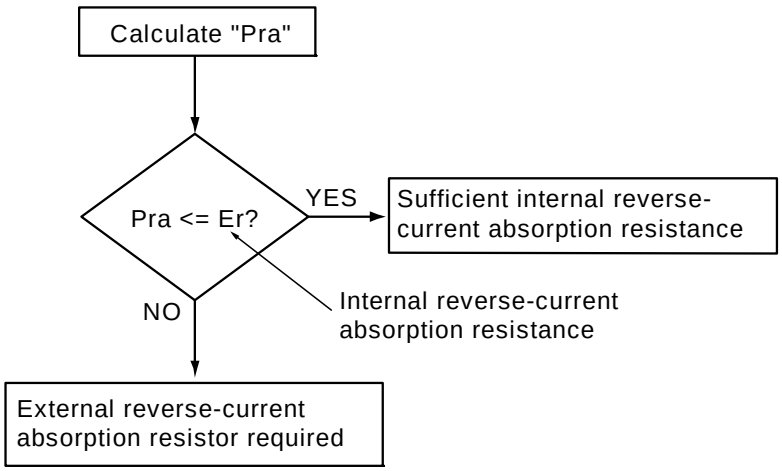

Example 4: Use of motor VLBSV–18030 and amplifier VLASX–070P3

$$Ej = \frac{2\pi \times 3000}{60} \times 4.0 + 0.2 = 251 \qquad \text{(J)}$$

$$Es = \left(\frac{2\pi \times 3000}{60} \times 0.6 + 180 + 70 \right) \times 0.2 + 0 = 88 \qquad \text{(J)}$$

$$Pra = \frac{251 - 88}{1} = 163 \qquad \text{(W)}$$

Because the internal resistance (Er) of 070P3 is 80 (W), an external reverse-current absorption resistor of over 163 (W) is required.
When using an optional reverse-current absorption resistor, its absorption capacity should be 200 (W). If you select a resistor of 15 Ω and 200 W, specify user parameters UP21 and UP22 as shown below.

User parameter setting:

UP21 15.0 (Ω)

UP22 0.20 (kW)

N:	rpm during descending	3000 (min^{-1})
Tg:	Tare torque	4.0 (N·m)
TL:	Load torque	0.6 (N·m)
Pm:	Motor loss	180 (W)
Pa:	Amplifier power consumption	70 (W)
Ec:	Amplifier power source charging capcity	16 (J)
Tc:	Descending time	0.2 (s)
td:	Descending cycle	1 (s)
π:	Ratio of circumstance of circle to its diameter	3.14

2.4.2 Reverse-Current Absorption Resistor

For 008P2, 012P2, 025P2, 035P3, 070P3, 100P3 and 200P3

- Outer dimensions and absorption capacity

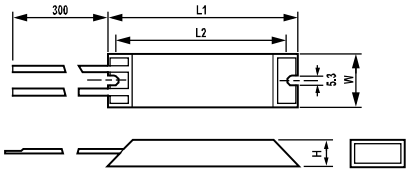

	Type	Absorption capacity	L1	L2	W	H
A	RGH60A 100 Ω	30 W	115	100	40	20
B	RGH200A 30 Ω	100 W	215	200	50	25
C	RGH400A 30 Ω	200 W	265	250	60	30

- Combination of reverse-current absorption resistor and amplifier, and user parameter setting

Absorption capacity / Amp. model & recommended resistance	30 W	100 W	200 W	400 W	600 W	800 W
VLASX-008P2 30 Ω	PA A JP1 UP21 100.0 UP22 0.03	PA B JP1 UP21 30.0 UP22 0.10				
VLASX-012P2 30 Ω		PA B JP1 UP21 30.0 UP22 0.10	PA C JP1 UP21 30.0 UP22 0.20	PA B B B B JP1 UP21 30.0 UP22 0.40		PA C C C C JP1 UP21 30.0 UP22 0.80
VLASX-025P2 30 Ω		PA B JP1 UP21 30.0 UP22 0.10	PA C JP1 UP21 30.0 UP22 0.20	PA B B B B JP1 UP21 30.0 UP22 0.40		PA C C C C JP1 UP21 30.0 UP22 0.80
VLASX-035P3 30 Ω		PA B JP1 UP21 30.0 UP22 0.10	PA C JP1 UP21 30.0 UP22 0.20	PA B B B B JP1 UP21 30.0 UP22 0.40		PA C C C C JP1 UP21 30.0 UP22 0.80
VLASX-070P3 15 Ω			PA B B JP1 UP21 15.0 UP22 0.20	PA C C JP1 UP21 15.0 UP22 0.40		PA B B B B B B B B JP1 UP21 15.0 UP22 0.80

Absorption capacity Amp. model & recommended resistance	30 W	100 W	200 W	400 W	600 W	800 W
VLASX-100P3 10 Ω			(300 W) UP21 10.0 UP22 0.30		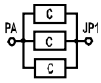 UP21 10. UP22 0.60	(1.2 kW) 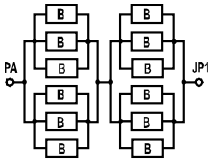 UP21 10.0 UP22 1.20
VLASX-200P3 6 Ω						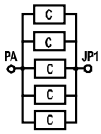 UP21 6.0 UP22 1.00

CAUTION	The resistor will be heated to a high temperature. NEVER touch it. Otherwise, you may burn your hand.

For 320P3, 500P3 and 400P4

- Outer dimensions and absorption capacity (GRZG400 3R0K)

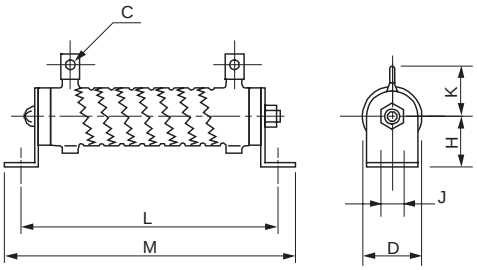

(mm)

	Absorption capacity	L	M	H	K	D	J	C
D	200 W	385	411	40	46	47	9.5	Ø8.2

- Combination of reverse-current absorption resistor and amplifier, and user parameter setting

Absorption capacity Amp. model & recommended resistance	200 W	400 W	800 W	1600 W	1800 W	3200 W
VLASX–320P3 3 Ω	 UP21 3.0 UP22 0.2		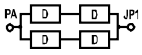 UP21 3.0 UP22 0.8			
VLASX–500P3 1.5 Ω		 Up21 1.5 UP22 0.4		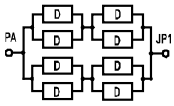 UP21 1.5 UP22 1.6		
VLASX–400P4 3 Ω			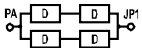 UP21 3.0 UP22 0.8		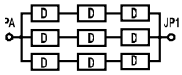 UP21 3.0 UP22 1.8	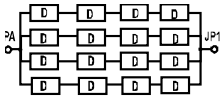 UP21 3.0 UP22 3.2

- Selection of external resistor with large absorption capacity
  Unless the required absorption capacity is enough with any resistor given in the above table, select a resistor according to the table below.

Amplifier model VLASX–	Recommended resistance	Maximum absorption capacity
008P2	30 Ω	200 W
012P2	30 Ω	500 W
025P2	30 Ω	1.0 kW
035P3	30 Ω	1.5 kW
070P3	15 Ω	3.0 kW
100P3	10 Ω	5.5 kW
200P3	6 Ω	11 kW
320P3	3 Ω	20 kW
500P3	1.5 Ω	33 kW
400P4	3 Ω	55 kW

2.4.3 Connecting Reverse-Current Absorption Resistor

The reverse-current absorption resistor incorporated in the servo amplifier cannot be used together with an external absorption resistor. When this happens, disconnect the shortcut wire between JP1 and JP2 and connect the external resistor between PA and JP1. To remove wiring from 008P, 012P, 025P and 035P, a special tool is required. If you do not have such a tool, use a cable (CV07B) specialized for reverse-current absorption resistor. For 070P, wiring can be removed from the connector, using a flathead screwdriver. Amplifiers 100P, 200P, 320P and 500P have a terminal block, respectively, and wiring can be changed, using a Phillips screwdriver.

CAUTION	A reverse-current absorption resistor will be heated to about 200°C. Take careful precautions on the set position, radiation method, etc. Use a heat-resistant plastic coated wire and arrange so that the wire will not touch the resistor.

CAUTION	A servo amplifier and a reverse-current absorption resistor should be used only in a specified set. Otherwise, a fire may be caused.

008P2, 012P2,
025P2, 035P2

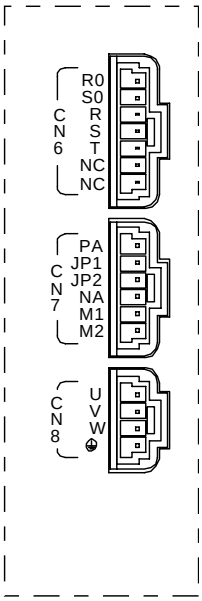

Use a special cable.

070P3

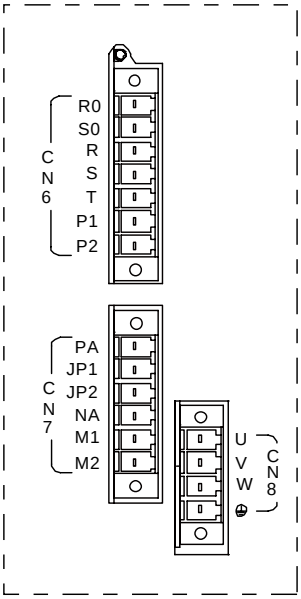

Disconnect the shortcut wire between JP1 and JP2, then connect PA and JP1.

100P3

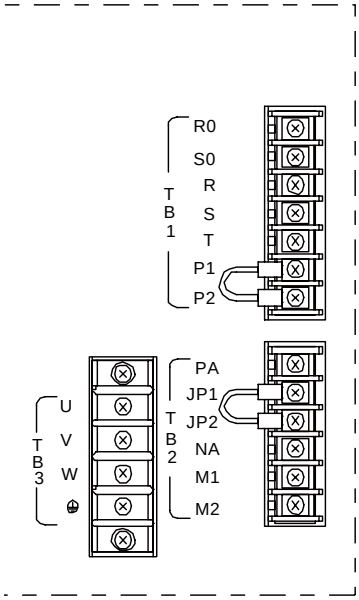

Disconnect the shortcut wire between JP1 and JP2, then connect PA and JP1.

200P3

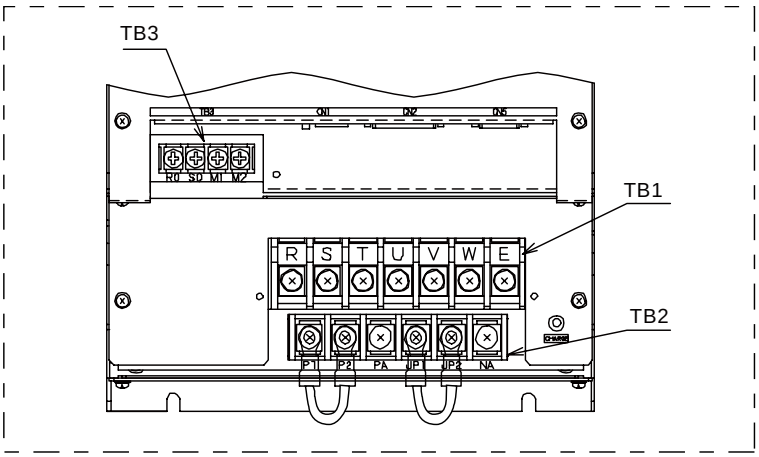

Disconnect the shortcut wire between JP1 and JP2, then connect PA and JP1.

320P3, 500P3, 400P4

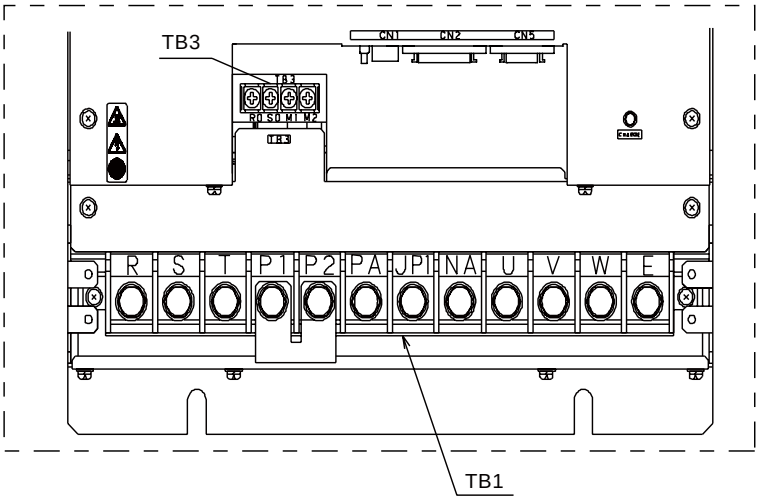

Connect PA and JP1.

⚠ **CAUTION**	⚠	The resistor will be heated to a high temperature. NEVER touch it. Otherwise, you may burn your hand.

2.5 Grounding

To assure safety and as a measure against noise, be sure to perform grounding with grounding resistance of 100 Ω or less for a servo amplifier and servo motor. Otherwise, switching noise of a transistor may adversely affect the signal and motor drive systems. Proper wiring and grounding are necessary.

- Mount the noise filter near the servo amplifier.
- If the grounding washer of the control panel is more than 1 m away from the servo amplifier, provide another grounding washer on the servo amplifier set panel to perform grounding.
- Be sure to connect the servo motor grounding wire to the servo amplifier terminal (marked "⏚").

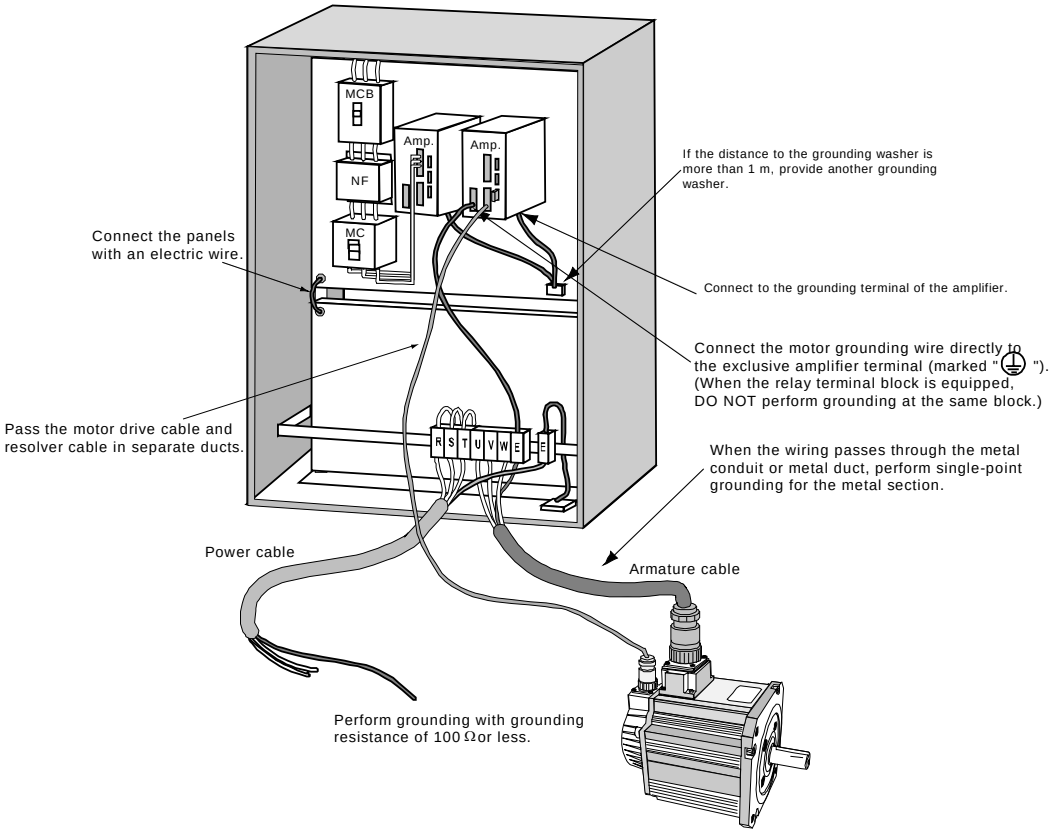

- Avoid a common grounding with other high-power equipment, motor, etc.
- DO NOT perform grounding to the steel structure of buildings where various equipment are connected.

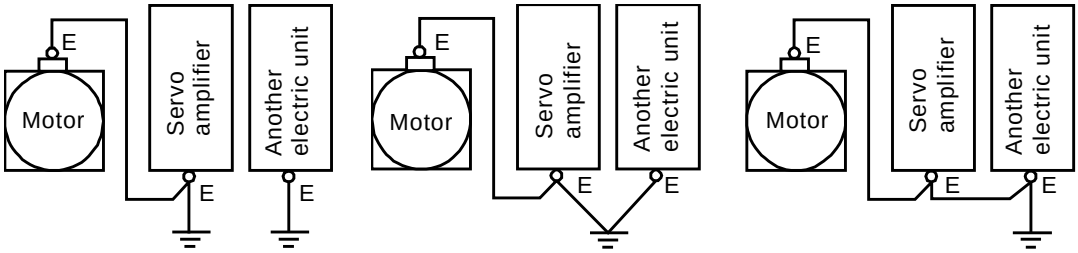

Separate grounding: OK　　Shared grounding: OK　　Shared grounding: NG

⚠ **CAUTION**	⏚	Be sure to ground the grounding terminal (E), using an electric wire. Otherwise, you may get an electric shock.

2.6 Measures against Noise

- Use a noise filter on the primary side of the AC power source. A noise filter has an input connector and an output connector which should not be confused.

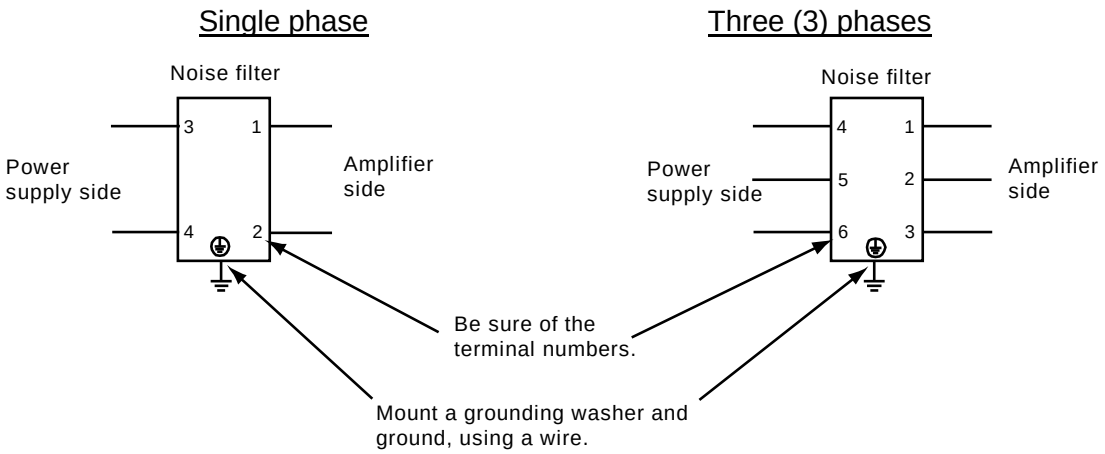

- When using a relay, electromagnetic solenoid, electromagnetic brake and the like, which cause electric noise in the vicinity of the servo amplifier, take the following measures.

(1) Such devices and components should be mounted at places as far as the servo amplifier.

(2) Equip a noise killer or diode on the noise-source devices and components.

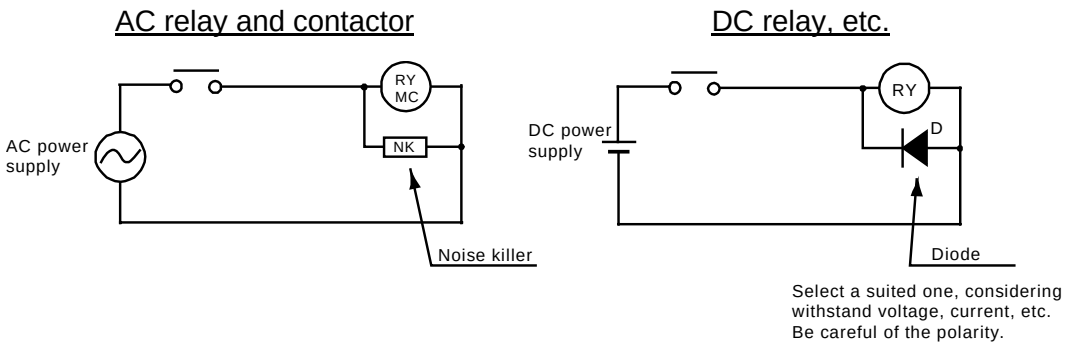

- When housing an inverter in the same panel, take appropriate measures by insulating the power supply system and separating the wiring routes.

Signal Circuit	Section 3

3.1 Input/Output Signal Table 2

3.2 Connecting Signal Circuit 6

3.2.1 Analog Input 6

3.2.2 Pulse Input 8

3.2.3 24 V Input 11

3.2.4 24 V Output 12

3.2.5 Differential Output 13

3.2.6 Motor Sensor CN5 20

3.2.7 Analog Input/Output CN17 (Option) 26

3.1 Input/Output Signal Table

Four (4) types of signals are available; 24 V input/output, analog input, pulse input and differential output. Even if the signal bears the same name, its function may differ with the control mode. For instance, the IN4 signal means “forward rotation permit” in the speed control mode, which is “speed selection 2”, however, in the direct feed mode. This should be noted especially when conducting wiring.

- The following table shows the standard I/O for each control mode.
- Sequence I/O other than the standard I/O can be selected by means of user parameter UP46 (i.e., sequence I/O selection). Especially, when using a dynamic brake or holding brake, I/O assignment may have to be changed.

<Standard I/O> (* Excluding the NCBOY mode)

Mode / Symbol	Mode 01 Speed control	Mode 02 Current control	Mode 03 Position control	Mode 04 Speed current position control	Mode 05 Direct feed	Mode 06 Draw control
REF	Speed command	Speed limit		Speed command or speed limit	Feedrate 1	
CLI	Current limit	Current limit	Current limit	Current limit or current command	Feedrate 2	
FMA, FMB			Pulse command	Pulse command		Pulse command
AP, BP, ZP	Encoder output, display unit output, present value output, command pulse output, draw pulse output					
IN7	Run	Run	Run	Run	Run	Run
IN6	Reset	Reset	Reset	Reset	Reset	Reset
IN5	MB check	MB check	MB check	MB check	MB check	MB check
IN4	Forward rotation permit		Forward rotation permit	Deviation clear	Speed selection 2	DRAW3
IN3	Reverse rotation permit	Monitor changeover	Reverse rotation permit	Current limit changeover	Speed selection 1	DRAW2
IN2	Present value clear	Present value clear	Deviation clear	Position control changeover	Forward rotation command	DRAW1
IN1	Home point stop	Speed limit changeover	Home point stop	Home point stop	Reverse rotation permit	DRAW0
IN0	PON input	PON input	PON input	PON input	PON input	PON input
OUT4	Servo normal	Servo normal	Servo normal	Servo normal	Servo normal	Servo normal
OUT3	Servo ready	Servo ready	Servo ready	Servo ready	Servo ready	Servo ready
OUT2	During home point stop	Stop detection	In-position/ During home point stop	In-position/ During home point stop	Stop detection	Stop detection
OUT1	Warning	Warning	Warning	Warning	Warning	Warning
OUT0	MB output	MB output	MB output	MB output	MB output	MB output

<Special sequence I/O> See Para. 5.9.

⚠ **CAUTION**	⚠ If the CN2 control connector is connected wrongly, the motor may move unexpectedly. To avoid this, make sure that the wiring is correctly arranged and perform a test run.

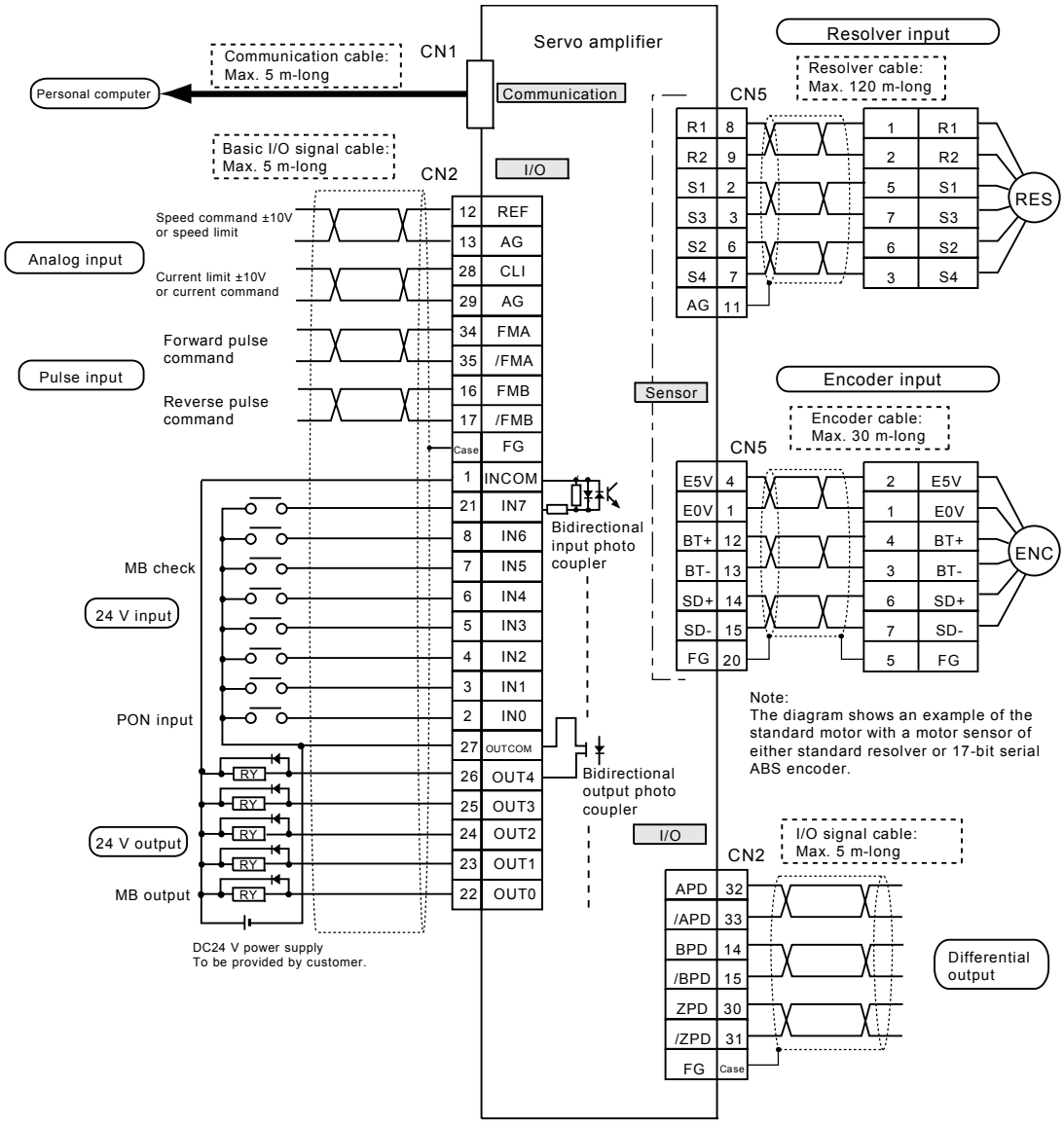
Servo amplifier
Communication cable:
Max. 5 m-long
CN1
Personal computer
Communication
Basic I/O signal cable:
Max. 5 m-long
CN2
I/O
Speed command ±10V
or speed limit
Analog input
Current limit ±10V
or current command
Forward pulse
command
Pulse input
Reverse pulse
command
12 REF
13 AG
28 CLI
29 AG
34 FMA
35 /FMA
16 FMB
17 /FMB
Case FG
1 INCOM
21 IN7
8 IN6
7 IN5
6 IN4
5 IN3
4 IN2
3 IN1
2 IN0
27 OUTCOM
26 OUT4
25 OUT3
24 OUT2
23 OUT1
22 OUT0
Bidirectional
input photo
coupler
MB check
24 V input
PON input
RY
24 V output
MB output
DC24 V power supply
To be provided by customer.
Bidirectional
output photo
coupler
Sensor
Resolver input
Resolver cable:
Max. 120 m-long
CN5
R1 8
R2 9
S1 2
S3 3
S2 6
S4 7
AG 11
1 R1
2 R2
5 S1
7 S3
6 S2
3 S4
RES
Encoder input
Encoder cable:
Max. 30 m-long
CN5
E5V 4
E0V 1
BT+ 12
BT- 13
SD+ 14
SD- 15
FG 20
2 E5V
1 E0V
4 BT+
3 BT-
6 SD+
7 SD-
5 FG
ENC
Note:
The diagram shows an example of the
standard motor with a motor sensor of
either standard resolver or 17-bit serial
ABS encoder.
I/O
I/O signal cable:
Max. 5 m-long
CN2
APD 32
/APD 33
BPD 14
/BPD 15
ZPD 30
/ZPD 31
FG Case
Differential
output

Connector symbol	Cable name	Cable type	Remarks
CN1	RS232C communication cable	CV01C + LAN cable	
CN2	I/O signal cable	CV02C–©©©A,B	
CN5	Standard resolver cable	CV05G–©©©A,B,C,Z	Select either one.
	V ZA motor resolver cable	CV05H–©©©A,C	
	Standard serial ABS cable	CV05D–©©©A,B,C,Z	
	V ZA motor serial ABS cable	CV05E–©©©A,C	

! **CAUTION**	⚠ The I/O master power voltage should be in the range of DC24 V ±10 %. Otherwise, the equipment may be damaged.

! **CAUTION**	⚠ If CN5 is connected wrongly, the motor may go uncontrollable. To avoid this, make sure that the wiring is correctly arranged and perform a test run.

3.2 Connecting Signal Circuit

3.2.1 Analog Input

- Input specification
  Maximum input voltage:
  DC±12 V
  Input impedance: 49 kΩ

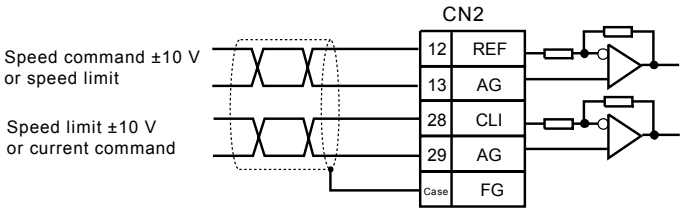

- Wiring
  Perform wiring with two (2) pairs of twisted pair shield wire in the I/O signal cable. Connect the amplifier side shield with CN2–29 (AG) or CN2 (FG) and cut the shield on the other end.

- Revolving direction
  The motor revolves in the forward direction with speed command input positive voltage in the speed control mode. (Factory-setting)
  The motor revolves in the forward direction with current command input positive voltage in the current control mode. (Factory-setting)
  The revolving direction can be changed by user parameter UP15.

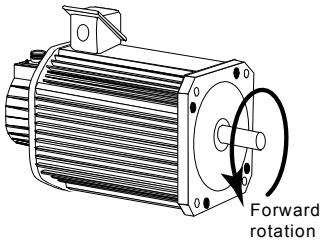

- Functional description
  The speed command controls the speed in the speed control mode and limits the speed in the current control mode.
  The current command controls the current (torque) in the current control mode and limits the current (torque) in the speed control mode.
  To make the control function operative, setting of UP34 and existence of the limit changeover signal are mandatory. Also, time setting for linear acceleration/deceleration and S-type acceleration/deceleration is possible to the speed command. In the direct feed mode, feedrate 1 and federate 2 can be used by specifying zero (0) for UP24 and UP25.

- Example of connection

  The figure below shows an example setting of speed command and current limit by using a relay. When this happens, select a relay contact that is suitable for minuscule current. Note that the most suitable wire is a twisted pair shield wire. Use a lug terminal for resistor and volume control so that those signals can be sent through the twisted pair shield wire. Connect the shield with AGND on the amplifier side. Trim the other side.

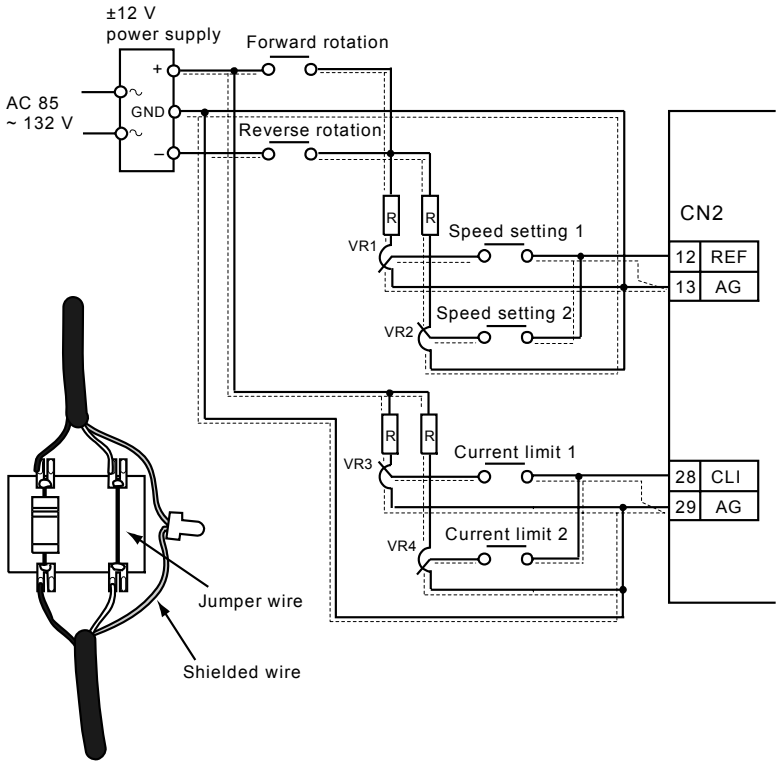

Item	Symbol	Model	Maker
DC power supply	PS	RMC15A–1–N (AC85–132V +12V0.3 A –12V0.2A)	Cosel
Volume control	VR	RV30YN20SB 1KOHM 2W	Cosmos
Resistor	R	CF1/4C201J (1/4W 200 OHM)	KOA
Relay	RY	MY4ZN–D2 DC24V (when coil voltage is DC24 V)	OMRON

3.2.2 Pulse Input

- Input specification

  Maximum input frequency: 500 kpps, DC5 V, 11 mA

  When the pulse command type is forward/reverse pulse: 500 kpps

  When the pulse command type is phase AB pulse: 125 kHz

  When the pulse command types are both pulse and forward/reverse signal: 500 kpps

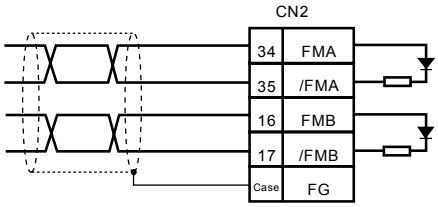

Forward/reverse pulse (max. 500 kpps)

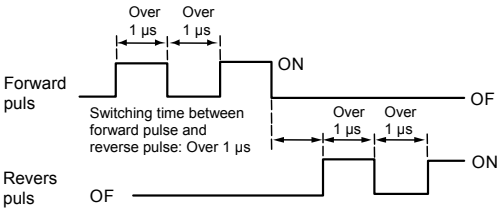

Phase AB pulse (max. 125 kHz)

Phase AB pulse can be selected by means of parameter UP16.
The input pulse encoder resolution is multiplied four times internally.

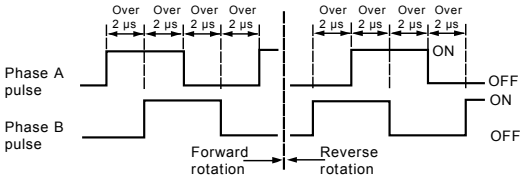

Pulse and forward/reverse signal (max. 500 kpps)

Pulse and forward/reverse signal can be selected by means of parameter UP16.

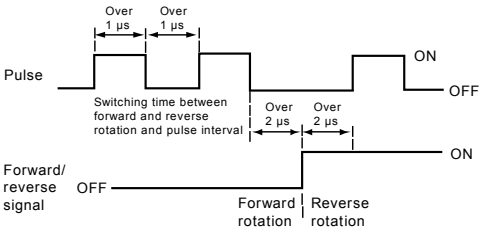

Motor revolving direction

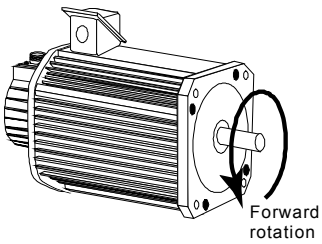

Note: The state where current flows is ON, and the state where it does not flow is OFF. It is recommended to use the line driver output in the output circuit on the command equipment side. When using the open collector output, the maximum cable length should be 1 m.

- Wiring

  Perform wiring with two (2) pairs of twisted pair shield wire in the I/O signal cable. Connect the amplifier side shield with FG and cut the shield on the other end.

- Revolving direction

  Factory-setting:

  When the pulse command type is forward/reverse pulse: Input pulses to FMA for forward rotation.

  When the pulse command type is phase AB pulse: Input pulses to FMA after rotating 90 degrees for forward rotation.

  When the pulse command types are both pulse and forward/reverse signal: Input pulses to FMA and set FMB to “OFF” for forward rotation.

  The setting can be changed, using appropriate user parameter.

- Functional overview

  The electronic gear is the function which allows positioning and high-accuracy speed control without drift with any number of pulses (frequency) by setting the travel distance (weight) of a machine per command pulse by means of relevant user parameters. The machine travel distance per command pulse should be specified for UP00 (numerator) and UP05 (denominator) based on the motor detection split count of 24000 pulses per revolution.

  When you wish to move the machine at a rate of 0.01 mm per input pulse in the forward/reverse pulse mode while the ball screw pitch is 10 mm and the deceleration ratio is 1/2:

  Specify “48” for UP00 and “1” for UP05.

$$\frac{\text{Travel distance per pulse} \times \text{Detection split count}}{\text{Ball screw pitch} \times \text{Deceleration ratio}} = \frac{0.01 \times 24000}{10 \times 1/2} = 48$$

Then, specify the pulse command type.

- When the pulse command type is forward/reverse pulse, specify “UP16 = 000.”
- When the pulse command type is phase AB pulse, specify “UP16 = 001” or “UP16 = 101.”
  When UP16 = 001, each machine axis moves 0.04 mm per pulse.
  When UP16 = 101, each machine axis moves 0.01 mm per pulse.

3.2.3 24 V Input

- Input specification

Item	Specification
ON voltage	19.2 ~ 26.4 V
OFF voltage	3 V or less
Input current	6 mA (TYP)
ON delay time	2.0 ms or less
OFF delay time	2.0 ms or less

As a bi-directional photo coupler is used for the interface, both sink (minus common wiring) and source (plus common wiring) connections are possible.

- Wiring

  Use a batch-shield wire. Connect the shield wire to the grounding terminal of the servo amplifier. Cut off the opposite side of the shield wire.

- Example of connection

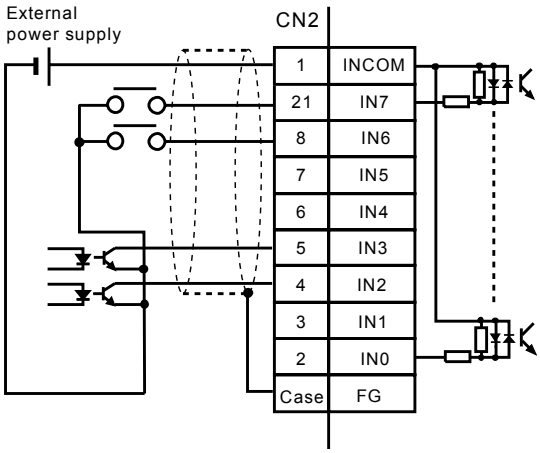

(a) Sink (minus common)

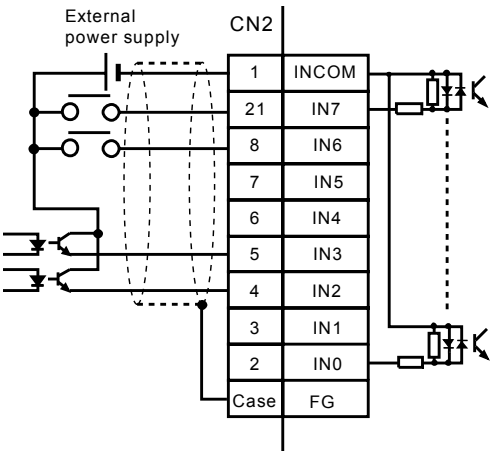

(b) Source (plus common)

3.2.4 24 V Output

- Output specification

Item	Specification
ON voltage (at 50 mA)	1.5 V or less
OFF leak current	0.1 mA or less
ON delay time	1.6 ms or less
OFF delay time	1.6 ms or less

Output voltage DC24 V, max. current 50 mA (per contact)
This output drives the LED, photo coupler and miniature relay.

- Wiring

  Use a batch-shield wire. Connect the shield wire to the grounding of the servo amplifier. Cut off the opposite side of the shield wire. Make sure that the polarity of noise preventing diode of the relay is correct. Otherwise, the output transistor will be damaged.

- Example of connection

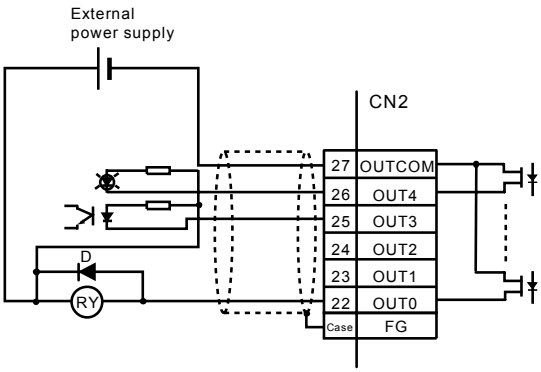

Sink (minus common)

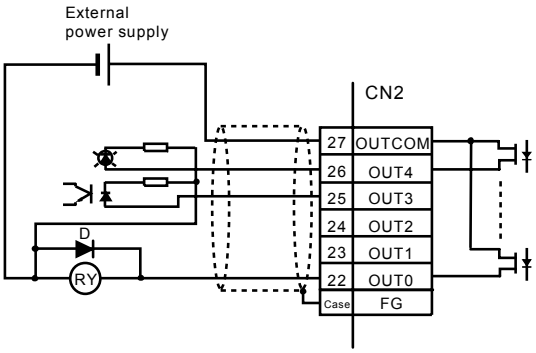

Source (plus common)

Name	Symbol	Type	Maker
Relay	RY, D	MY2N–D2 DC24V (built in for D)	OMRON
DC power supply	PS	P15E–24–N AC85 ~ 264V 0.7A	Cosel

3.2.5 Differential Output

- Output specification

  Maximum output frequency
  When the pulse output type is phase AB pulse: 125 kHz
  When the pulse output type is forward/reverse pulse: 500 kpps

  Maximum output current: 20 mA (3.4 V)

  Line driver output (equivalent to AM26LS31)

  A fraction rate up to 65535/65535 can be set for the split count of 24000 pulses per revolution in the range of 0.05 to 500. (The split count is 131072 pulses per revolution for the 17-bit serial ABS encoder.)

- Wiring
  Perform wiring, using two (2) or three (3) twisted pairs in the I/O signal cable. Connect the amplifier side shield with FG and cut off the shield on the other end.

- Output for revolving direction
  The pulse output type is factory-set to phase AB pulse. In the forward rotation, the pulse output to APD advances by 90 degrees from the pulse output to BPD. When you change the setting of user parameter UP17, forward/reverse pulse is selected for the pulse output type. In the forward rotation, the pulse is output to APD, and in the reverse rotation, the pulse is output to BPD.

Pulse output

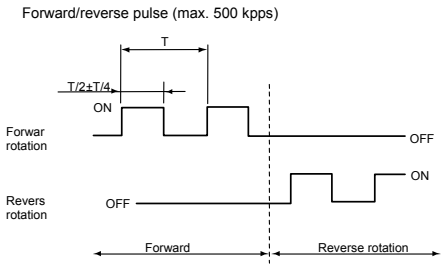

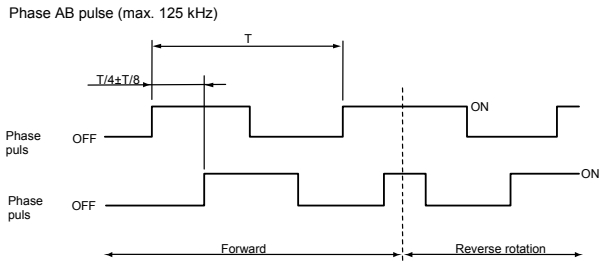

Output pulse frequency (pps)

$$= \frac{\text{Travel speed (mm/s)}}{\text{Travel distance per motor revolution (mm)}} \times 24000 \times \frac{\text{UP05}}{\text{UP04}}$$

Output pulse frequency (pps)

$$= \frac{1}{4} \times \frac{\text{Travel speed (mm/s)}}{\text{Travel distance per motor revolution (mm)}} \times 24000 \times \frac{\text{UP05}}{\text{UP04}}$$

Phase Z pulse (resolver)

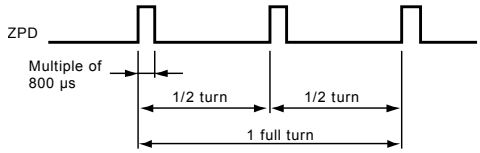

When a resolver is used as the motor sensor, two (2) zero point pulses (phase Z pulses) are present (every 180 degrees) during one (1) full turn of the motor. When an encoder is used, only one (1) pulse is present. It is possible to shift the output position by means of parameter UP06. When you wish to shift the motor axis by 36 degrees, for instance, specify “36”. This function is useful for establishing the machine zero point.

- Functional overview

  The differential output comes in the following three (3) functions, either of which can be selected by means of parameter UP18.

  1. Pulse output

     The motor position is output by forward/reverse pulse or phase AB pulse according to the line driver method.

  2. Monitor output

     Motor speed, present value, motor current, electronic thermal value, motor phase amount and machine speed are output to an optional display unit (DPA–80).

  3. Output of present value in serial data

     A present value is serially output either in binary 32 bits, 23 bits plus parity, 24 bits plus parity or 31 bits plus parity. For the absolute position (ABS) sensor, the present value is an absolute position.

  Joint use of these three (3) functions is not possible.

Function 1: Pulse output

The motor position pulse is output according to the line driver method.

℅ Example of determining output pulse counts for a travel distance:
When you wish to output one (1) pulse for the travel distance of 0.01 mm (forward/reverse pulse) while the ball screw pitch is 10 mm and the reduction ratio is 1/2, specify as follows:
UP04 = 48, UP05 = 1, UP17 = 00

$$\frac{\text{Travel distance per pulse} \times \text{Detection split count}}{\text{Ball screw pitch} \times \text{Deceleration ratio}} = \frac{0.01 \times 24000}{10 \times 1/2} = 48$$

When the pulse command type is phase AB pulse (UP17 = 01), one (1) pulse is output for 0.04 mm. The split count for output pulse is 500 (pulses/rev).

$$\frac{\text{Ball screw pitch}}{\text{Travel distance per pulse} \times \text{Deceleration ratio}} = \frac{10}{0.01 \times 1/2} = 2000 \text{ (pulses/rev)}$$

℅ Example of obtaining a desired split count:
When you wish to output 2000 pulses/rev in the phase AB pulse mode, specify as follows:
UP04 = 3, UP05 = 1, UP17 = 01

$$\frac{4 \times \text{Desired split count}}{\text{Detection split count}} = \frac{4 \times 2000}{24000} = \frac{1}{3} = \frac{\text{UP05}}{\text{UP04}}$$

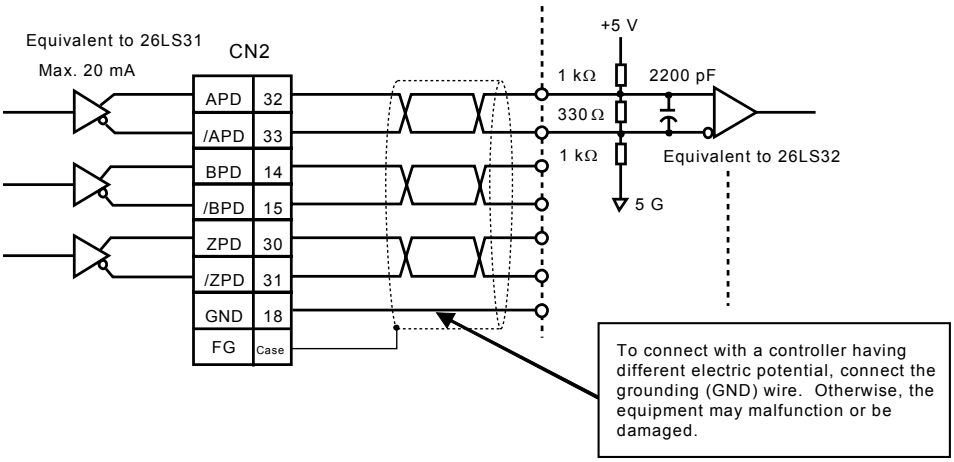

Function 2: Monitor output

Connect an optional display unit DPA–80 (8-digit). The display contents should be specified by parameter UP18.

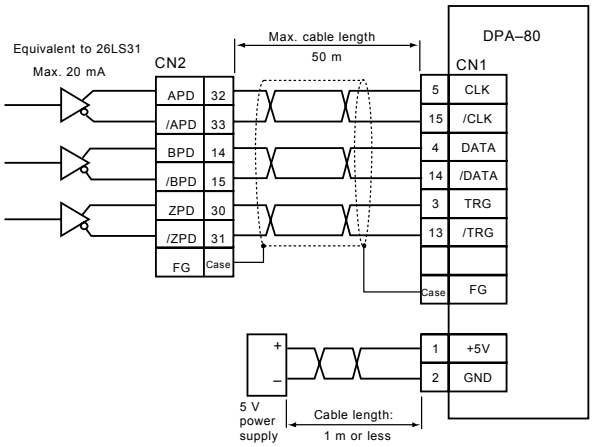

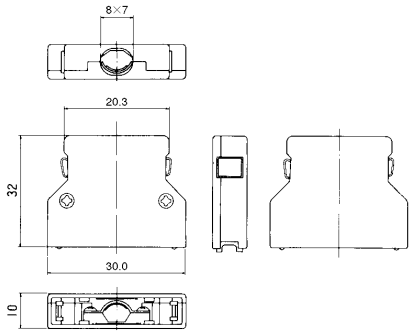

Pins	20
Plug	PCR–E20FS
Case	PCS–E20LB

Function 3: Output of present value in serial data

The position where you clear the input signal present value is taken as present value “0”. By using this position as the start point, present values are output in serial data. The maximum rotation count is $\pm(2^{15}-1)$ (*1). When the absolute (ABS) sensor is provided, present values are absolute positions.

(*1) Value when a resolver ABS is used. When a 17-bit serial ABS is used, the maximum rotation count is $\pm(2^{12}-1)$.

- Example of connection
  Data are serially output from CN2. When this happens, the display unit (DPA–80) cannot be used. Unless the ABS sensor is used, ABS cable and battery cable are unnecessary. The length of a cable connecting the differential output signal and host computer should be less than 5 m.

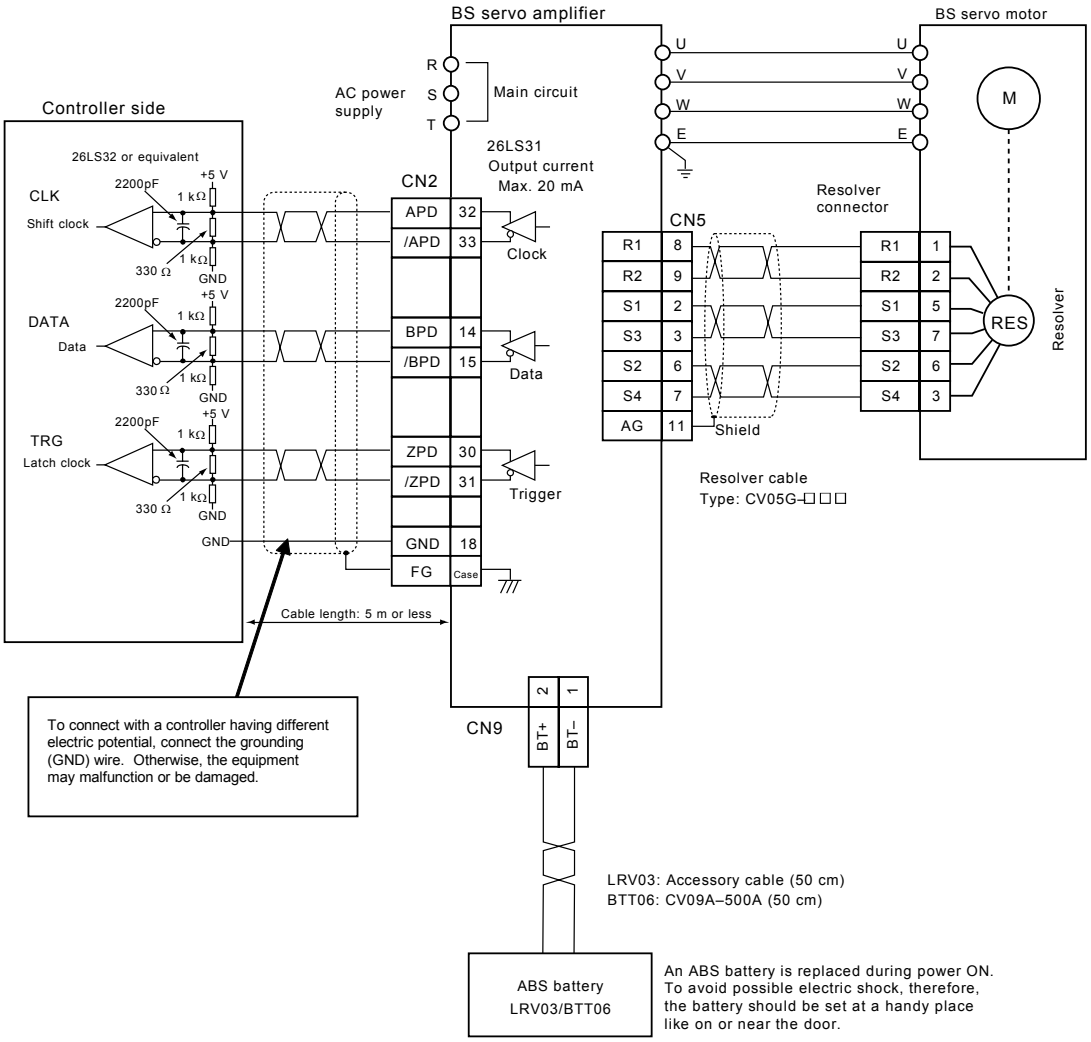
BS servo amplifier
BS servo motor
Controller side
AC power supply
R
S
T
Main circuit
U
V
W
E
M
26LS32 or equivalent
+5 V
2200pF
1 kΩ
CLK
Shift clock
330 Ω
GND
DATA
Data
TRG
Latch clock
26LS31
Output current
Max. 20 mA
CN2
APD 32
/APD 33
Clock
BPD 14
/BPD 15
Data
ZPD 30
/ZPD 31
Trigger
GND 18
FG
Case
CN5
R1 8
R2 9
S1 2
S3 3
S2 6
S4 7
AG 11
Shield
Resolver connector
R1 1
R2 2
S1 5
S3 7
S2 6
S4 3
RES
Resolver
Resolver cable
Type: CV05G-□□□
Cable length: 5 m or less
To connect with a controller having different electric potential, connect the grounding (GND) wire. Otherwise, the equipment may malfunction or be damaged.
CN9
2 BT+
1 BT–
LRV03: Accessory cable (50 cm)
BTT06: CV09A–500A (50 cm)
ABS battery
LRV03/BTT06
An ABS battery is replaced during power ON.
To avoid possible electric shock, therefore, the battery should be set at a handy place like on or near the door.

- Parameter setting

  Specify the lower two (2) digits of UP18 so that present values can be output as binary serial data.

  UP18 ····· 1 1 ® ®

  Output selection → 2: Present value output type

Set value	Present value output type	Output order								
		FIRST	2	…	7	8	9	10	…	LAST
0	32 bits	MSTB D31	D30	…	D25	D24	D23	D22	…	LSB D0
1	23 bits plus parity	x	x	…	x	x	Parity	MSTB D22	…	LSB D0
2	24 bits plus parity	x	x	…	x	Parity	MSTB D23	D22	…	LSB D0
3	31 bits plus parity	Parity	MSTB D30	…	D25	D24	D23	D22	…	LSB D0

Serial data are output from MSB as shown in the above table. Irrespective of the setting of present value output type, 32-bit data are output, and the part marked “x” in the above table is truncated in a shift register.

- Output timing

  - Validating serial data

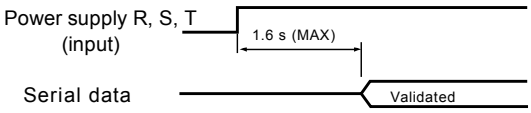

- Serial data

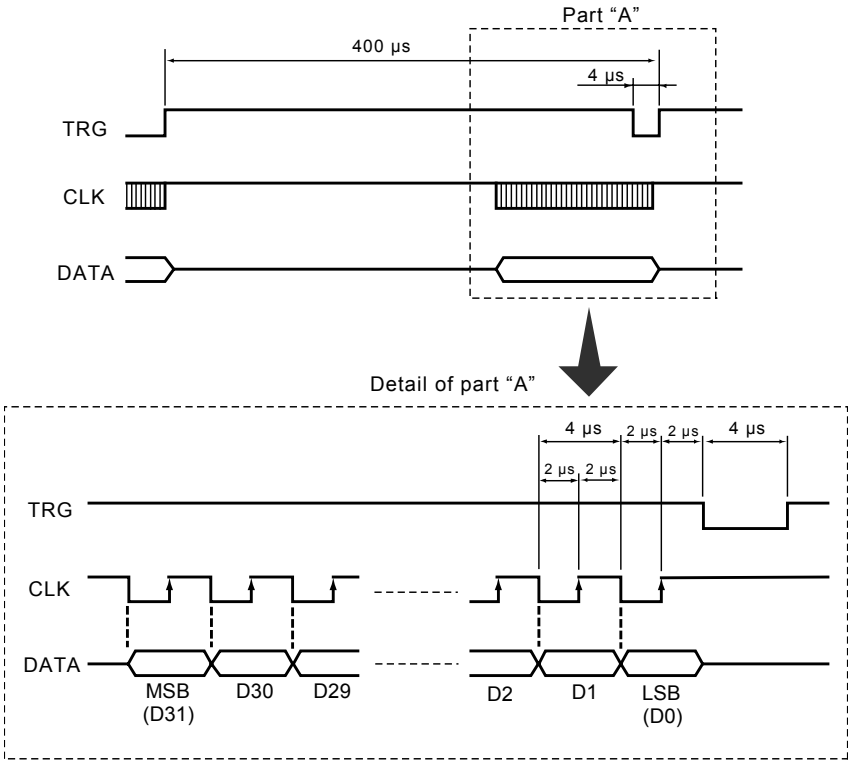
Part “A”
400 µs
4 µs
TRG
CLK
DATA
Detail of part “A”
4 µs
2 µs
2 µs
4 µs
2 µs
2 µs
TRG
CLK
DATA
MSB
(D31)
D30
D29
D2
D1
LSB
(D0)

3.2.6 Motor Sensor CN5

The X series motor sensor comes with a resolver, resolver multi-turn ABS, a 17-bit serial ABS encoder.
The resolver requires excitation signals which are supplied from the servo amplifier. Use an exclusive cable (resolver cable) for connection.
For absolute position detection (ABS) of the resolver, a resolver multi-turn system (–A©) is provided, which uses a standard motor and has the ABS function on the servo amplifier side.
To connect the 17-bit serial ABS encoder, use an exclusive cable (serial ABS cable). The cable comes in the four (4) types; cable with connectors on both amplifier and motor sides, cable with a connector on the motor side alone, cable with a connector on the amplifier side alone, and cable without any accessories.

List of applicable cables

Motor			ABS function	Applicable amp.	Applicable cable
Series	Name	Type		VLASX–©©©P©	
V	Resolver motor	VLBSV–©©©©©	Absent	H©	CV05G–©©©*
		VLBSV–ZA©©©15	Present	A© (*1)	
		VLBSV–ZA©©©30	Absent	H©	CV05H–©©©*
			Present	A© (*1)	
	17-bit serial ABS encoder motor	VLBSV–©©©©©S1 VLBSV–ZA©©©15S1	Present	S©	CV05D–©©©*
		VLBSV–ZA©©©30S1			CV05E–©©©*
T	Resolver motor (20 kHz)	VLBST–©©©©©V	Absent	H©	CV05G–©©©*
			Present	A© (*1)	
	Resolver motor (5 kHz)	VLBST–©©©©©	Absent	T© (*1)	
G	Resolver motor	VLBSG–A©©©20	Absent	H©	
			Present	A© (*1)	

(*1) To be marketed soon.

- For –H©©, –A©© and –T©©

  Resolver cable for standard motor (CV05G)

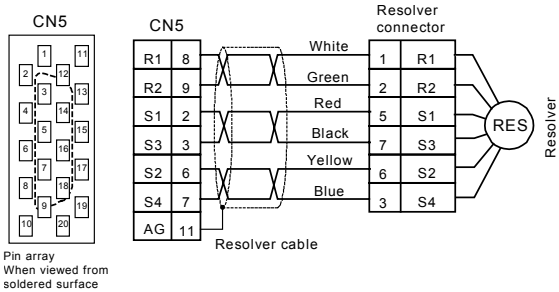

CV05G–®®®A

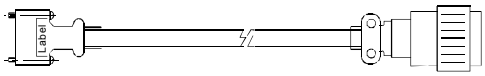

Connector 54306–2011 Plug JRC16WPQ–7S
Clamp 54331–0201 Clamp JRC16WPQ–CP10

CV05G–®®®B

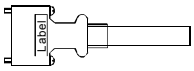

CV05G–®®®C

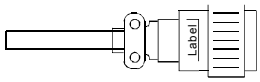

CV05G–®®®Z

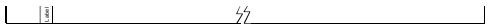

Type	Accessories
CV05G–©©©A	With connectors on both sides
CV05G–©©©B	With a connector on the amplifier side alone
CV05G–©©©C	With a connector on the motor side alone
CV05G–©©©Z	With both sides unprocessed

Standard length: 3 m, 5 m, 10 m
Max. 120 m (*1)

(*1) For available cables of non-standard length, see Section 8.

Resolver cable for ZA motor (CV05H) [Applicable for motors of 750 W or less]

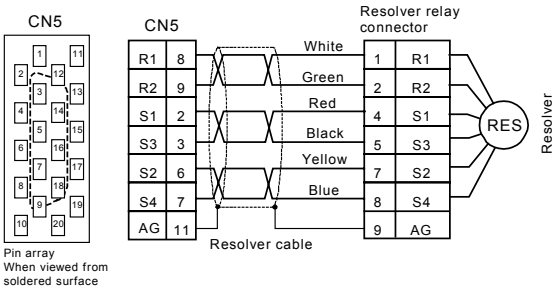

CV05H–®®®A

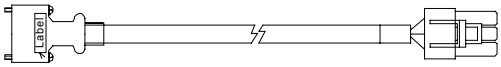

Connector 54306–2011 Connector YLP–09V
Clamp 54331–0201 Contact BYF–01T–P0.5A

CV05H–®®®C

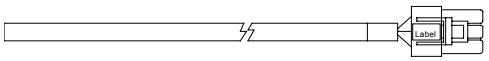

Type	Accessories
CV05H–©©©A	With connectors on both sides
Note 1	With a connector on the amplifier side alone
CV05H–©©©C	With a connector on the motor side alone
Note 2	With both sides unprocessed

Standard length: 3 m, 5 m, 10 m
Max. 120 m (*1)

Note 1: Same as CV05G–©©©B.

Note 2: Same as CV05G–©©©Z.

(*1) For available cables of non-standard length, see Section 8.

! **CAUTION**	⚠ DO NOT connect and disconnect the CN5 connector while the power is turned on. Otherwise, the equipment will malfunction or be damaged.

- For –S©©

Serial ABS cable for standard motor (CV05D)

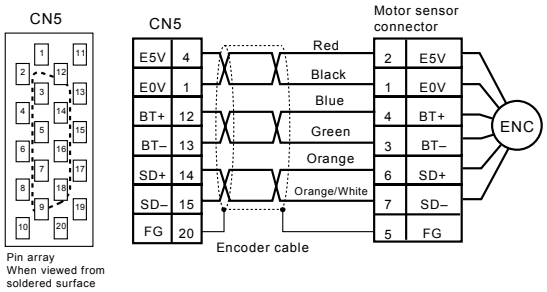

CV05D–®®®A

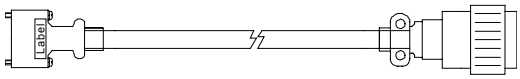

Connector 54306–2011 Plug JRC16WPQ–7S
Clamp 54331–0201 Clamp JRC16WPQ–CP10

CV05D–®®®B

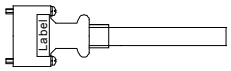

Type	Accessories
CV05D–©©©A	With connectors on both sides
CV05D–©©©B	With a connector on the amplifier side alone
CV05D–©©©C	With a connector on the motor side alone
CV05D–©©©Z	With both sides unprocessed

CV05D–®®®C

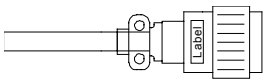

CV05D–®®®Z

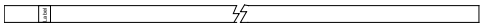

Standard length: 3 m, 5 m, 10 m
Max. 30 m (*1)

(*1) For available cables of non-standard length, see Section 8.

Serial ABS cable for ZA motor (CV05E) [Applicable for motors of 750 W or less]

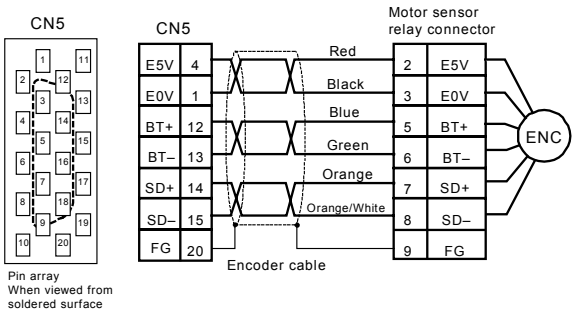

CV05E–®®®A

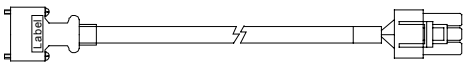

Connector 54306–2011 Connector YLP–09V
Clamp 54331–0201 Contact BYF–01T–P0.5A

CV05E–®®®C

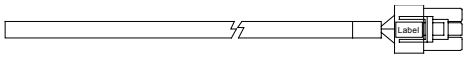

Type	Accessories
CV05E–©©©A	With connectors on both sides
Note 3	With a connector on the amplifier side alone
CV05E–©©©C	With a connector on the motor side alone
Note 4	With both sides unprocessed

Standard length: 3 m, 5 m, 10 m
Max. 30 m (*1)

Note 3: Same as CV05D–©©©B.

Note 4: Same as CV05D–©©©Z.

(*1) For available cables of non-standard length, see Section 8.

⚠ **CAUTION**	⚠ DO NOT connect and disconnect the CN5 connector while the power is turned on. Otherwise, the equipment will malfunction or be damaged.

- Relaying resolver cable
  DO NOT relay the resolver cable as a rule. When you have to relay it, take careful precautions on the following points.

  (1) Make the relay wire (i.e., unshielded part) as short as possible.
  (2) DO NOT approach the motor drive line to the relay.
  (3) Relay the shield wire, too.

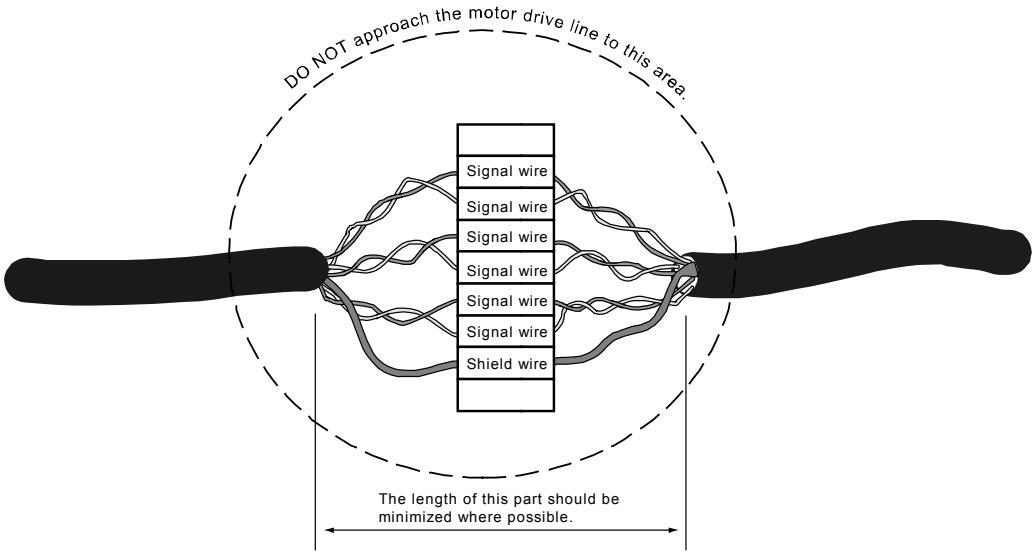

- Relaying serial ABS cable
  Like the resolver cable, twist signal wires and connect a batch-shield wire completely. Take utmost care not to approach the serial ABS cable to the motor drive line.

- Parameter setting
  Specify the resolver cable length for user parameter UP03 (resolver cable length). If the set value differs from actual length, the motor torque may drop. Round off the functions below 1 m. For the serial ABS cable, there is no parameter for specifying the cable length.

⚠ **CAUTION**	⚠ If connection is made incorrectly at the time of relaying, the motor may go uncontrollable. To avoid this, make sure that the wiring is correctly arranged and perform a test run.

3.2.7 Analog Input/Output CN17 (Option)

- Specification

No. of AD channels	2
No. of DA channels	2
AD resolution	16-bit
DA resolution	16-bit
AD full-scale	±10 V (Input impedance 10 kΩ)
DA full-scale	±10 V (Output impedance 330 Ω)

- Interface circuit

Analog input

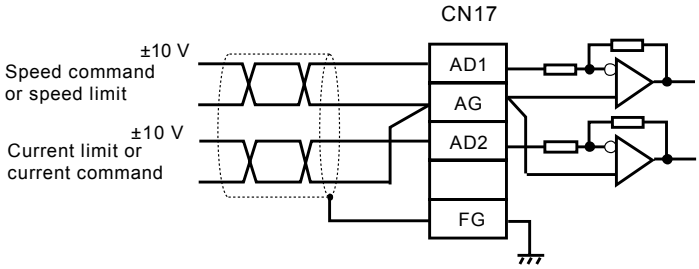

Analog output

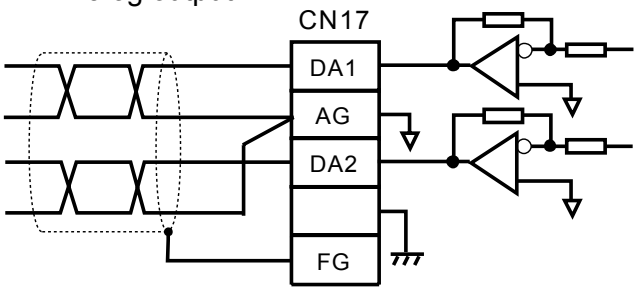

Terminal arrangement

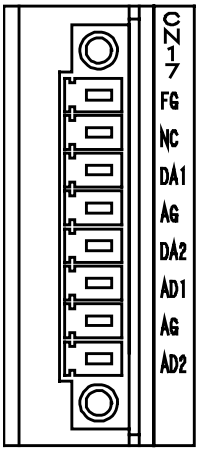

- Wiring

  Perform wiring, using a twisted pair shield wire. Connect the amplifier side shield with the AG terminal or FC terminal, and cut the shield on the other end. Use the following types of connector and clamp.

  [1] Driver : SZF0–0.4–2.5
  [2] Connector : EC381VM–08P made by Dinkle Enterprise
  [3] Clamp terminal : AI series made by Phoenix Contact
  Clamp terminal: AI 0.34–8QT for 22AWG (*1)
  Special tool: ZA–3 (*1)

  TC series made by Nichifu
  Clamp terminal: TMEV TC–0.5
  Special tool: NH–32

  (*1) Available from Misumi also (as of October, 2006).
  Contact Tokyo Marketing Center at 81–3–3645–5111.

- Parameter setting

No.	Name	Unit	Setting range	Factory-setting	Function
UP15	Analog command polarity	None	00 ~ 11	00	Specify the analog input polarity of speed command and current command by a two (2)-digit number. ®®–AD1 (REF) 0: Motor forward revolution with “+” voltage. 1: Motor reverse revolution with “+” voltage. AD2 (CL1) 0: Motor forward torque with “+“ voltage. 1: Motor reverse torque with “+” voltage.
UP32	Analog I/O selection	None	00 ~ 22	00	Select the analog I/O. ®® — Analog input selection =0: Use of standard analog inputs (REF, CLI). =1: Use of optional analog inputs (AD1, AD2). =2: Analog input not used. Analog output selection =0: Analog output not used. =1: Use prohibited. =2: Use of optional analog outputs (DA1, DA2).
AP07	Analog input 1 zero adjustment		±9.999	0.001 V	Adjusted already.
AP08	Analog input 1 scale adjustment		0.1 ~ 3276.7	0.1 (min^{-1})/V	Specify the speed value per 1 V of analog input 1. Ex.) When you wish to specify 150 min^{-1} per 1 V, specify “150.0”.
AP09	Analog input 2 zero adjustment		±9.999	0.001 V	Adjusted already.
AP10	Analog input 2 scale adjustment		0.1 ~ 3276.7	0.1 A/V	Specify the amperage per 1 V of analog input 2. Ex.) When you wish to specify 2 A per 1 V, specify “2.00”.

No.	Name	Unit	Setting range	Factory-setting	Function
AP13	Analog output 1 selection	None	000 ~ 399	000	Select the analog output 1 data and output type. ®®® Output selection (displayed data) 00: Speed (with filter) 01: Current (with filter) 02: Present value (after processing of electronic gear) 03: Present value (sensor direct) 04: Deviation (after processing of electronic gear) 05: Deviation (sensor direct) 06: Speed command 07: Current command 08: Position command 09: Motor phase 10: Speed (without filter) 11: Current (without filter) 12: BL value 13: OL value 14: RL value 15: Fin temperature 16: Speed deviation 17: Current deviation Output type (display method) 0: Non-reversed display 1: Reversed output 2: Absolute value output 3: Without non-reversed clamp
AP14	Analog output 1 scale	0.1	0.1 ~ 3276.7	300	Specify the value per 1 V of analog output 1. Speed: 0.1 ~ 3276.7 [min^{-1}/V] Current: 0.1 ~ 3276.7 [A/V] Pulse: 0.1 ~ 3276.7 [P/V] Voltage: 0.1 ~ 3276.7 [V/V] Angle: 0.1 ~ 3276.7 [deg/V] Percentage: 0.1 ~ 3276.7 [%/V] Temperature: 0.1 ~ 3276.7 [°C/V] Ex.) When you wish to set 2 A per 1 V at current output setting, specify “2.0”.

No.	Name	Unit	Setting range	Factory-setting	Function
AP15	Analog output 2 selection	None	000 ~ 399	000	Select the analog output 2 data and output type. For the function, see the descriptions on AP13 above.
AP16	Analog output 2 scale	0.1	0.1 ~ 3276.7	300	Specify the value per 1 V of analog output 2. For the function, see the descriptions on AP14 above.

Display/Operation Unit and Display Details	Section 4

4.1 LED Lamps (GL, RS) 2
4.2 Reset Switch 3
4.3 Display/Operation Unit 4
4.4 Operating Keys 4
4.5 Hierarchal Operation 5
4.6 Operation and Details of Status Display Area 7
4.6.1 Motor Test Operation 10
4.6.2 Clear of Present Value 11
4.6.3 Motor Electronic Thermal High-Speed 11
4.6.4 Resolver ABS Special Display 12
4.6.4 ABS Sensor Multi-Turn Amount Display 13
4.6.6 Fan Test 13
4.7 Operation and Details of Check Display Area 14
4.7.1 Sequence Output Test 17
4.7.2 Clear of Alarm History 18
4.7.3 Parameter Version Display 18
4.7.4 Gate Array and CPU Board Version Display 19
4.7.5 Amplifier Model Display 19
4.8 Analog Input/Output Adjustment Parameter 20
4.8.1 Automatic Zero Adjustment 22
4.8.2 Manual Zero Adjustment 22
4.8.3 Scale Adjustment and Analog Output Zero Adjustment 23
4.9 Tuning Parameter 24
4.9.1 Auto-Tuning Operation 24
4.9.2 Filter Tuning Parameter 25
4.10 User Parameter 26

4.1 LED Lamps (GL, RS)

Various statues of servo amplifier are indicated by the two (2) LEDs equipped on the upper front of the servo amplifier. These LEDs are useful when no display/operation unit is provided, or they can serve as the simple status monitor.

Status	Display	GL (green)	RL (red)
Normal	The green LED flickers and the red LED is OFF.	Flicker	OFF
HALT System error (901 ~ 904) generation	Both the green and red LEDs are ON.	ON	ON
Alarm	An alarm code is indicated by flickering green and red LEDs.	Indicates the digit of 10 of alarm code after flickering quickly. (*1)	Indicates the digit of 1 of alarm code after flickering quickly. (*1)
Boot mode	Both the green and red LEDs flicker.	Flicker	Flicker

(*1) The digit of 10 (green-colored LED) and digit of 1 (red-colored LED) of an alarm code are expressed by the number of flickering counts, respectively. Before displaying an alarm code, both the green and red LEDs flicker at the same time as a signal.

Example: When alarm 26 (illegal parameter setting) has generated:

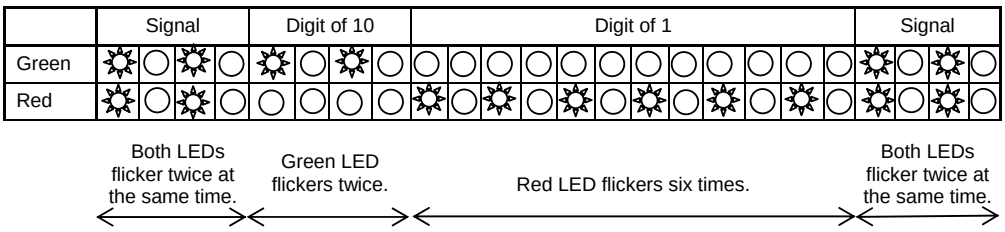

4.2 Reset Switch

It is possible to reset an alarm by means of the reset switch (SW3) provided on the upper front side of the servo amplifier.

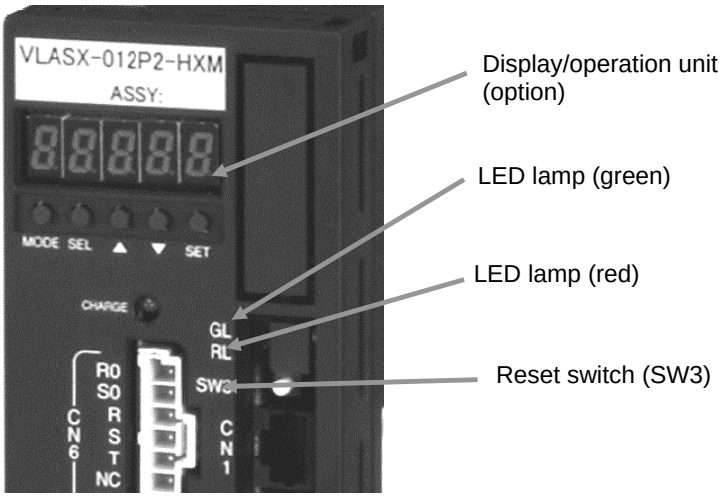

4.3 Display/Operation Unit

The display/operation unit allows setting of user parameters, tuning parameters and servo adjustment values by means of operating keys, and display of a running status, alarm, etc., on the five (5)-digit display device. (This unit is an optional and may not be provided according to the specifications selected.)

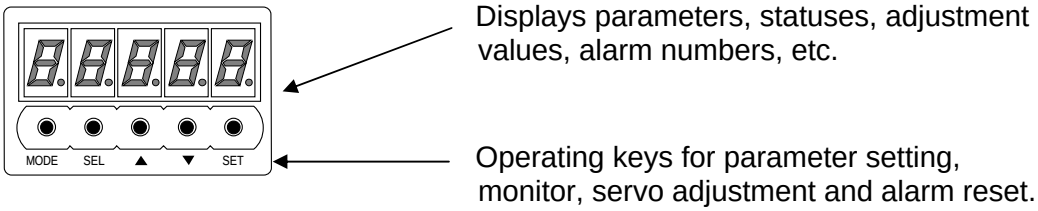

4.4 Operating Keys

Each operating key has a function described below when pressed independently. It serves as a different function when pressed together with another key or double-clicked.

- Each operating key has function described in the table below when pressed independently.

Key	Function
MODE	Press this key to change the display areas. When double-clicked, the system returns to the predetermined menu. (For the predetermined menu to which the system returns, see the descriptions on individual operations below.)
SEL	Each time this key is pressed, the position for data entry shifts to the left digit by digit.
®	Press this key to shift the menu in the area or to increase a value at the time of data setting.
™	Press this key to shift the menu in the area or to decrease a value at the time of data setting.
SET	Used to establish a set value and to reset an alarm.

- Each operating key serves as another function when pressed at the same time with another key or double-clicked.

Key	Function
SEL + SET	Press these keys together to select the write mode at the time of data setting. Press these keys also to display the details of an alarm history, a warning message or servo lock missing condition.
® + MODE	Press these keys together to rotate the motor in the positive direction at a predetermined parameter speed during motor test operation.
™ + MODE	Press these keys together to rotate the motor in the negative direction at a predetermined parameter speed during motor test operation.
SEL + ™	Press these keys to change over the mode from automatic adjustment to manual adjustment during zero (0) adjustment or scale adjustment.
SEL + ® + ™ Press these keys for five (5) seconds continuously.	Press these keys to go down the hierarchy by one (1) level in each area.

4.5 Hierarchal Operation

Each time the MODE key is pressed, the areas change in turn in the order of Status display, Check display, Analog I/O adjustment parameters, Tuning parameters and User parameters. In each area, press the Up (®) or Down (™) key to select a menu. A shaded area in the menu shown in the figure below has a sub-menu. Press the Up (®) or Down (™) key together with the SEL key for five (5) seconds to move to the sub-menu. You can go to the auto-tuning manual mode from every parameter in the tuning parameter area. In the tuning parameter area, when you double-click the MODE key after parameter setting, the motor speed display of the status display area is called.

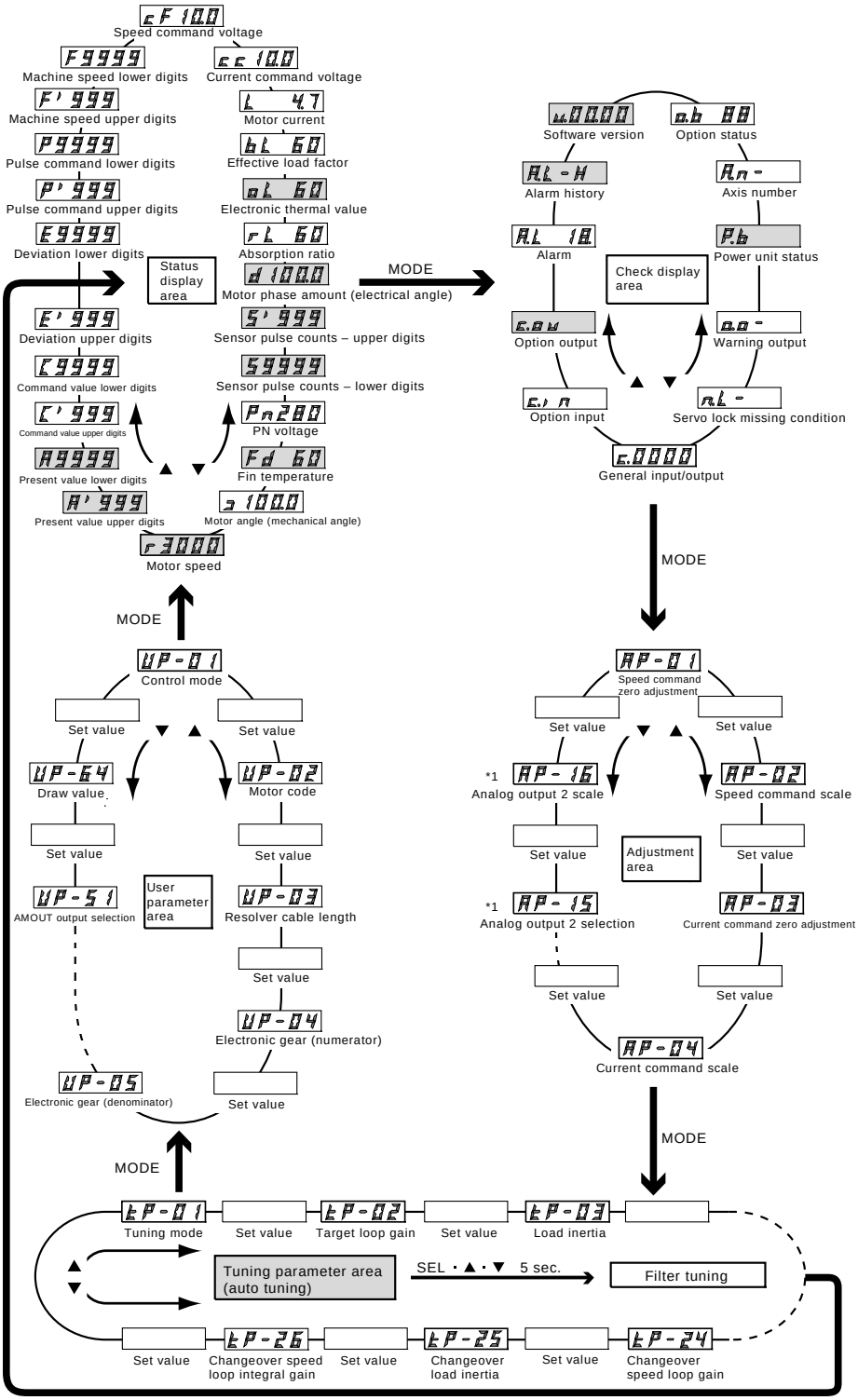

Double-click [MODE].

*1: Changes with the mode setting. AP06, AP05 when the VLBus–V mode is selected.

4.6 Operation and Details of Status Display Area

This area shows the running condition such as speed, present value and effective load factor. Move to the top menu (i.e., motor speed) of the status display area, using the MODE key. Select a desired menu in the status display area by means of the Up (®) or Down (™) key.

Status display menu	Symbol	Range and unit	Description
Motor speed	r	±99999 min^{-1}	Indicates the motor speed. While the motor is revolving in the reverse direction, the symbol flickers. When the motor speed exceeds ±10,000 min^{-1}, no symbol is displayed. During reverse rotation, all digits flicker.
Upper digits of present value	A'	±9999999 pulses	Counts the pulses of “feedback pulse × UP05/UP04.” When the value is negative, the symbol flickers. When the counter value exceeds the display range, ±9999999 remains.
Lower digits of present value	A		
Upper digits of command value	C'	±9999999 pulses	Counts the command pulses to the deviation counter. When the value is negative, the symbol flickers. When the counter value exceeds the display range, ±9999999 remains.
Lower digits of command value	C		
Upper digits of deviation value	E'	±9999999 pulses	Indicates the difference (i.e., deviation) between the command value and present value. When the value is negative, the symbol flickers. When the counter value exceeds the display range, ±9999999 remains.
Lower digits of deviation value	E		
Upper digits of pulse command	P'	+32767 ~ –32768	Counts the position control pulse commands and displays the value. The count is displayed even when the motor is not revolving. When the counter value exceeds the display range, a ring counter value is displayed.
Lower digits of pulse command	P		
Upper digits of machine speed	F'	±9999999	Indicates the speed of “motor speed × UP41/UP42.” When the value is negative, the symbol flickers. When the counter value exceeds the display range, 9999999 remains.
Lower digits of machine speed	F		
Speed command voltage	cF	±12.0 V	Indicates the input voltage of REF (speed command / speed limit).
Current command voltage	cc	±12.0 V	Indicates the input voltage of REF (current command / speed limit).

Status display menu	Symbol	Range and unit	Description
Motor current	L	±0.0 ~ Max. A	Indicates the output current to the motor.
Effective load factor	bL	0 ~ 255 %	Indicates the load factor to the rated current of motor (output current / rated current).
Motor electronic thermal	oL	0 ~ 110 %	Indicates rise in motor temperature in % expected from the output current. When the value reaches 110 %, the electronic thermal (AL17) is triggered.
Reverse-current absorption thermal	rL	0 ~ 100 %	Indicates the value of “reverse-current absorption capacity / reverse-current absorption resistor capacity” in %.
Motor phase amount (electrical angle)	d	0 ~ 359.9 deg	Indicates the angle (i.e., electrical angle) of the motor detection phase. (For eight (8) poles, the value is 360 degrees per 1/4 turn of motor. For four (4) poles, the value is 360 degrees per 1/2 turn of motor.)
Upper digits of sensor pulse counts	S'	±9999999 pulses	Indicates the number of pulses for each sensor during one (1) full turn of motor. When the value is negative, the symbol flickers. When the number of pulses for a sensor exceeds the display range, ±9999999 remains.
Lower digits of sensor pulse counts	S		
PN voltage	Pn	±999 V	Indicates the PV voltage.
Fin temperature	Fd	0 ~ 200°C	Indicates the fin temperature figured out from the analog input value.
Motor angle (mechanical angle)	∃	0 ~ 359.9 deg	Indicates the angle (mechanical angle) from the motor home position. The value is 360 degrees per one (1) full turn of motor. (When a resolver is used, the motor has a home position every 180 degrees.)

If a displayed value is negative, appropriate symbol flickers. If the number of digits of a value exceeds four (4), the excessive part is displayed in the upper digits.
If the number of lower digits of a value is less than four (4) and the upper digits are displayed, assume that the blank lower digit or digits are padded with zero (0) or zeros (0s).

When the present value is 1234567 pulses:

Upper 3-digit display

Lower 4-digit display

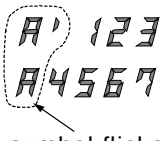

The symbol flickers if the value is negative.

When the present value is 1230067 pulses:

Upper 3-digit display

Lower 4-digit display

Zeros (0s) are not displayed.

4.6.1 Motor Test Operation

Before starting a test operation, make sure that the braking system is wired correctly and that the PON input (INO) is turned on, then turn off the operation command to set the servo free.

[Step 1] While r 0 (motor speed) is displayed, keep pressing the Up (®) and Down (™) keys for five (5) seconds at the same time while pressing the SEL key. Then FrEE is displayed.

[Step 2] Press the SET key to turn on the servo with the display changed to L 0.

[Step 3] Execute a motor test operation in the following manner.

- Motor forward revolution:
  The motor revolves in the forward direction while the Up (®) key is pressed.
- Motor reverse revolution:
  The motor revolves in the reverse direction while the Down (™) key is pressed.
- Continuous motor forward revolution:
  Press the MODE key while the motor is revolving in the forward direction by means of the Up (®) key. Then the motor revolves in the forward direction continuously. To cancel the continuous motor forward revolution, press the Up (®) key again.
- Continuous motor reverse revolution:
  Press the MODE key while the motor is revolving in the reverse direction by means of the Down (™) key. Then the motor revolves in the reverse direction continuously. To cancel the continuous motor reverse revolution, press the Down (™) key again.

[Step 4] Press the SET key, and the servo is set free with the display returned to FrEE.

[Step 5] Double-click the MODE key, and the system returns to the r 0 (motor speed) display.

4.6.2 Clear of Present Value

The present value can be cleared from the display/operation unit.

[Step 1] While A or A' (present value) is displayed, keep pressing the Up (®) and Down (™) keys for five (5) seconds at the same time while pressing the SEL key. Then clr is displayed.

[Step 2] Press the SEL and SET keys at the same time, and the present value clearing mode takes effect with the entire clr display flickering.

[Step 3] Press the SET key, and the present value clearing function is executed. Once the present value has been cleared, the flickering clr display stops.
Press the MODE key, and the present value clearing mode is canceled with the flickering clr stopped.

[Step 4] Double-click the MODE key, and the system returns to the A or A' (present value) display.

4.6.3 Motor Electronic Thermal High-Speed

The motor electronic thermal high-speed data can be monitored from the display/operation unit.

[Step 1] While oL (motor electronic thermal) is displayed, keep pressing the Up (®) and Down (™) keys for five (5) seconds at the same time while pressing the SEL key. Then oF (motor electronic thermal high-speed) is selected.

[Step 2] Double-click the MODE key, and the system returns to the oL (motor electronic thermal) display.

4.6.4 Resolver ABS Special Display

The resolver ABS special data (previous resolver phase data, resolver ABS phase counter, resolver ABS multi-turn data) can be monitored from the display/operation unit.

[Step 1] While [d] (motor phase amount) is displayed, keep pressing the Up (®) and Down (™) keys for five (5) seconds at the same time while pressing the SEL key. Then [U] (previous resolver phase data) is selected.

[Step 2] Press the Up (®) or Down (™) key to select either of the following displays.

- [U] (Previous resolver phase data)
  The value of resolver detection phase (i.e., electrical angle) is displayed after it is converted to the number of pulses in the range of 0 to 9999.
- [rA 0] (Resolver ABS phase counter)
  The numeric display changes from 0 to 1, 2 and 3 according to the resolver position.
- ***** (Resolver ABS multi-turn data)
  The multi-turn data of resolver ABS is displayed. (As this value is five (5-digit, no symbol is displayed.)

[Step 3] Double-click the MODE key, and the system returns to the [d] (motor phase amount) display.

4.6.5 ABS Sensor Multi-Turn Amount Display

The ABS sensor multi-turn amount can be monitored from the display/operation unit.

[Step 1] While S or S' (sensor pulse counts) is displayed, keep pressing the Up (®) and Down (™) keys for five (5) seconds at the same time while pressing the SEL key. Then n' (upper three (3) digits of ABS sensor multi-turn amount) is selected.

[Step 2] Press the Up (®) or Down (™) key to select either of the following displays.

- n' (Upper three (3) digits of ABS multi-turn data)
- n (Lower four (4) digits of ABS multi-turn data)

[Step 3] Double-click the MODE key, and the system returns to the S or S' (sensor pulse counts) display.

4.6.6 Fan Test

A fan test can be conducted from the display/operation unit.

[Step 1] While Fd (fin temperature) is displayed, keep pressing the Up (®) and Down (™) keys for five (5) seconds at the same time while pressing the SEL key. Then FAnt is displayed.

[Step 2] Press the SET key, and a fan test starts with the entire FAnt display flickering. Make sure that the fan is rotating then.

[Step 3] Press the SET key again, and the tan test finishes with the flickering FAnt display stopped.

[Step 4] Double-click the MODE key, and the system returns to the Fd (fin temperature) display.

4.7 Operation and Details of Check Display Area

This area shows the ON/OFF status of input and output signals, alarms and alarm history. Move to the top menu (i.e., general input/output) of the check display area, using the MODE key. Select a desired menu in the check display area by means of the Up (®) or Down (™) key.

<table>
<tr><th>Check menu</th><th>Symbol</th><th>Description</th></tr>
<tr><td>General input/output</td><td>c.</td><td>
The ON/OFF state of input and output signals is expressed in hexadecimal notation. The upper two (2) digits represent the output and the lower two (2) digits the input.

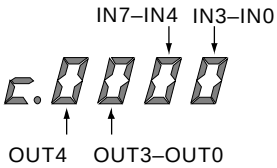

Example: Each state of IN3 ~ IN0 input is displayed in the following manner. If IN3 and IN1 are turned on, for instance, “c.©©©A” is displayed.

<table>
<tr><th>Display</th><th>IN3</th><th>IN2</th><th>IN1</th><th>IN0</th></tr>
<tr><td>0</td><td>■</td><td>■</td><td>■</td><td>■</td></tr>
<tr><td>1</td><td>■</td><td>■</td><td>■</td><td>%</td></tr>
<tr><td>2</td><td>■</td><td>■</td><td>%</td><td>■</td></tr>
<tr><td>3</td><td>■</td><td>■</td><td>%</td><td>%</td></tr>
<tr><td>4</td><td>■</td><td>%</td><td>■</td><td>■</td></tr>
<tr><td>5</td><td>■</td><td>%</td><td>■</td><td>%</td></tr>
<tr><td>6</td><td>■</td><td>%</td><td>%</td><td>■</td></tr>
<tr><td>7</td><td>■</td><td>%</td><td>%</td><td>%</td></tr>
</table>

<table>
<tr><th>Display</th><th>IN3</th><th>IN2</th><th>IN1</th><th>IN0</th></tr>
<tr><td>8</td><td>%</td><td>■</td><td>■</td><td>■</td></tr>
<tr><td>9</td><td>%</td><td>■</td><td>■</td><td>%</td></tr>
<tr><td>A</td><td>%</td><td>■</td><td>%</td><td>■</td></tr>
<tr><td>B</td><td>%</td><td>■</td><td>%</td><td>%</td></tr>
<tr><td>C</td><td>%</td><td>%</td><td>■</td><td>■</td></tr>
<tr><td>D</td><td>%</td><td>%</td><td>■</td><td>%</td></tr>
<tr><td>E</td><td>%</td><td>%</td><td>%</td><td>■</td></tr>
<tr><td>F</td><td>%</td><td>%</td><td>%</td><td>%</td></tr>
</table>

%: ON
■: OFF
</td></tr>
<tr><td>Option input</td><td>c.iN</td><td>Not used.</td></tr>
<tr><td>Option output</td><td>c.ou</td><td>Used for compulsive sequence output.</td></tr>
<tr><td>Real alarm</td><td>A.L</td><td>
Displays an alarm code. Press the SET key to reset the alarm. Once the alarm has been cancelled, the system automatically returns to the motor speed display of the status display area. Additionally, as long as the SEL key is kept pressed at AL26 generation, one of the following alarm causes can be displayed.

tbLEr (No motor table)

0 InEr (Control mode set to zero (0))

SPnEr (Sensor split count set to zero (0))

FEdEr (Position feedback error)

SEnEr (Illegal sensor number)

0 IoEr (Out of control mode)

oPoEr (Option board error)
</td></tr>
</table>

Check menu	Symbol	Description
Alarm history	A.L -H	Press the SEL and SET keys at the same time to display an alarm history. To display a previously generated alarm or alarms, use the Up (®) or Down (™) key. Up to sixteen (16) alarms can be displayed. When the MODE key is pressed, the system returns to the symbol menu A.L -H.
Software version	u.0000	Displays the CPU software version.
Option status	o.b	Displays the option board status in hexadecimal notation. o.b 00 0 □ : –□ V 5 □ : –□ A (Analog Input/Output) 7 □ : –□ X (Without option) □ 1 : – S □ (Serial encoder) □ 2 : – H □ (20 kHz resolver) □ 3 : –□□ (option sensor) Example: o.b 12 → –®C (CC-Link), –R® (20 kHz resolver)
Axis number	A.n -	Displays the station number of amplifier. Press the SEL and SET keys at the same time, and the write mode takes effect. Use the Up (®) or Down (™) key to change the data and press the SET key to establish it. When the MODE key is pressed, the system returns to the symbol menu A.n -. In the VLBus–V (NCBOY) mode, no data can be set by means of keys, and setting of the DIP switch on the communication board is displayed. The data thus changed becomes effective after power OFF and ON again.
Power unit (GA) status	P.b	P.b000 +10 : Absorption TrON +20 : Charging resistor overheat +40 : CPU down +80 : PON input +100 : Clock stop +200 : Overcurrent (GA) +400 : GA watchdog +800 : Gate disable +1 : Overcurrent (IPM) +2 : Main power contact ON +4 : Main power ON +8 : Control power ON Example: P.b00E → Main power contactor ON (+2), Main power ON (+4), Control power ON (+8)

Check menu	Symbol	Description
Warning output	0.0	Displays the number of warnings generated. Press the SEL and SET keys at the same time, and a warning generated currently flickers. Use the Up (®) or Down (™) key to change the display items. When the MODE key is pressed, the system returns to the symbol menu 0.0. • Warnings bAL (Battery voltage drop) ESL (Electronic thermal warning) F in (Fin overheat warning) LSE (Duplicate axis number warning) nHP (Home point not saved) rLo (Reverse-current absorption overheat warning) Pcd (Pulse command warning) Lnr (Own station data absent warning) • Conditions for causing each warning • Battery voltage drop When the ABS sensor is used and the battery voltage is less than 3.4 V, a warning is output (resolver only). • Home point not saved As long as the home point is not established, a warning is output. The output can be prohibited by means of Up12. • Electronic thermal warning When the thermal value reaches 100 %, a warning is output. • Reverse-current absorption warning When the absorption rate reaches 110 %, a warning is output. • Fin overheat warning When the fin temperature reaches 85 to 95°C, a warning is output. • Pulse command warning If the set value of electronic gear (UP04/UP05) does not fall under the range of 0.05 to 1000, a warning is output. • Duplicate axis number warning The amplifiers bearing the same axis number exist in the optical link. The amplifier which is specified last in terms of the connection order detects it. • Own station data absent warning This warning is output when no own station data is included in the communication data.

Check menu	Symbol	Description
Servo lock missing condition	n.L -	Displays the number of conditions missing for the servo lock. Press the SEL and SET keys at the same time, and a missing condition flickers. Use the Up (®) or Down (™) key to change the display items. When the MODE key is pressed, the system returns to the symbol menu n.L -. • Servo lock missing conditions Pon (PON not entered) rdy (Servo not ready) db1 (Dynamic brake confirmation not entered) Hb1 (Holding brake confirmation not entered) run (Operation command not entered) PnL (Main circuit uncharged)

4.7.1 Sequence Output Test

Compulsive sequence output can be executed from the display/operation unit. Execute this test while the motor is stopped. (Input data will not be updated because processing of the sequence program is stopped.)

[Step 1] While c.ou (option sequence output) is displayed, keep pressing the Up (®) and Down (™) keys for five (5) seconds at the same time while pressing the SEL key. Then SEQou is displayed.

[Step 2] Press the SEL key while pressing the SET key, and 500-0 appears on the display.

[Step 3] Press the SET key, and the display changes to 500-1 with OUT0 force-output.
For the output address 500, select either of OUT0 to OUT4 by means of the Up (®) or Down (™) key.
For the output state, each time the SET key is pressed, “1” (ON) or “0” (OFF) is selected repeatedly.

[Step 3] Press the MODE key, and the system returns to the SEQou display.

[Step 4] Double-click the MODE key, and the system returns to the c.ou (option sequence output) display.

4.7.2 Clear of Alarm History

The alarm history can be cleared from the display/operation unit.

[Step 1] While AL-H is displayed, press the SEL and SET keys at the same time. Then 0.- ** is displayed.

[Step 2] Keep pressing the Up (®) and Down (™) keys for five (5) seconds at the same time while pressing the SEL key. Then AHCLr is displayed.

[Step 3] Press the SEL and SET keys at the same time, and the AHCLr display flickers. Press the SET key to complete the clear operation.

[Step 4] Double-click the MODE key, and the system returns to the 0.- ** display. When the MODE key is pressed again, the system returns to the AL-H display.

4.7.3 Parameter Version Display

The parameter version can be displayed from the display/operation unit.

[Step 1] While u.00.00 (software version) is displayed, keep pressing the Up (®) and Down (™) keys for five (5) seconds at the same time while pressing the SEL key. Then P.00.00 (parameter version) is displayed.

[Step 2] It is possible to change the version displays, using the Up (®) and Down (™) keys.

P.00.00 (Parameter version display)
S.00.00 (Sequence table version display)
p.00.00 (Power unit parameter version display)
n.00.00 (Sensor parameter version display)
t.00.00 (Motor parameter version display)

[Step 3] Double-click the MODE key, and the system returns to the u.00.00 (software version) display.

4.7.4 Gate Array and CPU Board Version Display

The gate array and CPU board version can be displayed from the display/operation unit.

[Step 1] While P.b*** (power unit status) is displayed, keep pressing the Up (®) and Down (™) keys for five (5) seconds at the same time while pressing the SEL key. Then J.**** is displayed.

[Step 2] The gate array (0 ~ F: one (1) digit) and CPU board (0 ~ F: one (1) digit) are displayed, starting from the right.

[Step 3] Double-click the MODE key, and the system returns to the P.b*** (power unit status) display.

4.7.5 Amplifier Model Display

The amplifier model can be displayed from the display/operation unit.

[Step 1] Keep pressing the SET key while P.b*** (power unit status) is displayed, and the one of the following amplifier models is displayed.

008P2 012P2 025P2 035P3 070P3 100P3 200P3
320P3 500P3 400P4

The upper three (3) digits signify the maximum current [A (peak)] for each servo amplifier model number.
The lowest digit shows the power specification. (2: Single phase AC200 V, 3: Three (3) phases AC200 V, 4: Three (3) phases AC400 V)

[Step 2] Release the SET key, and the system returns to the P.b*** (power unit status) display.

4.8 Analog Input/Output Adjustment Parameter

This area is intended for adjusting the offset, scale and servo gain of input voltage. Move to the top menu (i.e., general input/output) of the adjustment area, using the MODE key. Select a desired menu in the adjustment area by means of the Up (®) or Down (™) key.

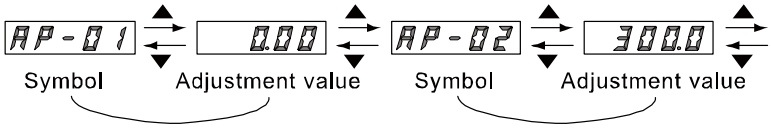

Adjustment menu	Symbol	Effective control mode	Setting range	Factory-setting	Unit	Writing from com. port
Speed command zero adjustment	AP-01	01, 02, 03, 04, 05, 06, 31	±9.999	Already adjusted	0.001 V	Not allowed
Speed command scale adjustment	AP-02	01, 02, 03, 04, 05, 06, 31	0.1 ~ 3276.7	150.0	0.1 (min^{-1}) / V	Allowed
Current command zero adjustment	AP-03	01, 02, 03, 04, 05, 06, 31	±9.999	Already adjusted	0.001 V	Not allowed
Current command scale adjustment	AP-04	01, 02, 03, 04, 05, 06, 31	0.01 ~ 3276.7	1.00	0.01 A / V	Allowed
VMOUT output zero adjustment	AP-05	01, 02, 03, 04, 05, 06, 31	±9.999	Already adjusted	0.001 V	Not allowed
AMOUT output zero adjustment	AP-06	01, 02, 03, 04, 05, 06, 31	±9.999	Already adjusted	0.001 V	Not allowed
Analog input 1 zero adjustment	AP-07	01, 02, 03, 04, 05, 06, 31	±9.999	Already adjusted	0.001 V	Not allowed
Analog input 1 scale	AP-08	01, 02, 03, 04, 05, 06, 31	0.01 ~ 3276.7	150.0	0.1 (min^{-1})/V	Allowed
Analog input 2 zero adjustment	AP-09	01, 02, 03, 04, 05, 06, 31	±9.999	Already adjusted	0.001 V	Not allowed
Analog input 2 scale	AP-10	01, 02, 03, 04, 05, 06, 31	0.01 ~ 327.67	1.00	0.01 A/V	Allowed

Adjustment menu	Symbol	Effective control mode	Setting range	Factory-setting	Unit	Writing from com. port
Analog output 1 zero adjustment	AP- 11	01, 02, 03, 04, 05, 06, 31	±9.999	Already adjusted	0.001 V	Not allowed
Analog output 2 zero adjustment	AP- 12	01, 02, 03, 04, 05, 06, 31	±9.999	Already adjusted	0.001 V	Not allowed
Analog output 1 selection	AP- 13	01, 02, 03, 04, 05, 06, 31	0 ~ 399	000	None	Allowed
Analog output 1 scale	AP- 14	01, 02, 03, 04, 05, 06, 31	0.01 ~ 3276.7	300.0	0.1	Allowed
Analog output 2 selection	AP- 15	01, 02, 03, 04, 05, 06, 31	0 ~ 399	001	None	Allowed
Analog output 2 scale	AP- 16	01, 02, 03, 04, 05, 06, 31	0.01 ~ 3276.7	5.0	0.1	Allowed

Note: AP07 through AP16 are used to set the analog I/O options. For details, see Para. 3.2.7.

4.8.1 Automatic Zero Adjustment

[Step 1] After displaying the adjustment values of AP01, AP03, AP07 and AP09, press the SEL and SET keys at the same time. All digits of the adjustment value flicker and the automatic adjustment mode becomes effective.

[Step 2] Press the SET key. When the flickering stops, the zero adjustment completes. Also, when the MODE key is pressed, the automatic adjustment is stopped midway to stop the flickering. (No data is changed.)

4.8.2 Manual Zero Adjustment

[Step 1] After displaying the adjustment values of AP01, AP03, AP07 and AP09, press the SEL and SET keys at the same time. All digits of the adjustment value flicker and the automatic adjustment mode becomes effective.

[Step 2] Press the SEL and Up (®) keys at the same time. Then the lower one (1) digit of the adjustment value flickers and the manual adjustment mode takes effect. (You can skip Step 1 above.)

[Step 3] Each time the SEL key is pressed, the flickering digit moves to the left. Change the adjustment value by means of the Up (®) and Down (™) keys.

[Step 4] Repeat Step 3 above until a desired value is set, then press the SET key. The adjustment finishes and the flickering stops. Also, when the MODE key is pressed, the manual adjustment is stopped midway to stop the flickering. (No data is changed.)

4.8.3 Scale Adjustment and Analog Output Zero Adjustment

[Step 1] After displaying the adjustment values of AP02, AP04, AP05, AP06, AP08, AP10, AP11, AP12, AP14 and AP16, press the SEL and SET keys at the same time. Then the lower one (1) digit of the adjustment value flickers and the change mode takes effect.

[Step 2] Each time the SEL key is pressed, the flickering digit moves to the left. Change the adjustment value by means of the Up (®) and Down (™) keys.

[Step 3] Press the SET key. When the flickering stops, scan adjustment completes. Also, when the MODE key is pressed, scale adjustment is stopped midway to stop the flickering. (Data is changed.)

4.9 Tuning Parameter

Use each parameter of this area to adjust the servo response.
Move to the top menu (i.e., TP01) of the tuning parameter area, using the MODE key.
Select a desired menu (symbol) in the tuning parameter area by means of the Up (®) or Down (™) key. To display the set value, press the Up (®) key.
For details of each parameter, see Para. 6.1.1.

- How to change parameter value

[Step 1] After displaying the set value, press the SEL and SET keys at the same time.

[Step 2] The lower one (1) digit of the set value flickers and the change mode takes effect. Each time the SEL key is pressed, the flickering digit moves to the left.

[Step 3] Change the set value by means of the Up (®) and Down (™) keys.

[Step 4] The set value is updated by pressing the SET key at the same time that the change mode terminates.

4.9.1 Auto-Tuning Operation

- Standard mode

[Step 1] Specify zero (0) for tP-01 (tuning mode), then turn the power off and on again.

[Step 2] Set the target loop gain of the machine to be controlled tP-02.

[Step 3] Specify the load inertia factor to the motor inertia of the machine to be controlled for tP-03.

- Semi-auto mode

[Step 1] Specify number 1 for tP-01 (tuning mode), then turn the power off and on again.

[Step 2] Set the target loop gain of the machine to be controlled tP-02.

[Step 3] Specify the allowable moving range of the machine to be controlled during auto-tuning operation for tP-04 (allowable rotations for tuning).

[Step 4] While a symbol or data area of tP-04 is displayed, keep pressing the Up (®) and Down (™) keys for five (5) seconds at the same time while pressing the SEL key. Then tunE is displayed.

[Step 5] Turn on both the main circuit (PON) and operation (RUN).

[Step 6] While tunE is displayed, press the SEL and SET keys simultaneously. Then the symbol flickers and tuning operation starts.

[Step 7] When the operation has finished normally, the symbol stops flickering. Press the MODE key, and the system returns to the tP-04 display. Also, when the MODE key is pressed during tuning operation, the operation stops and the system returns to the tP-04 display.

- Real-time mode

[Step 1] Specify number 2 for tP-01 (tuning mode), then turn the power off and on again.

[Step 2] Set the target loop gain of the machine to be controlled tP-02. Then the load inertia of the machine to be controlled tP-03 is set automatically.

- Manual mode

[Step 1] Specify number 3 for tP-01 (tuning mode), then turn the power off and on again.

[Step 2] Set all tuning parameters and manual tuning parameters.

4.9.2 Filter Tuning Parameter

The filter tuning parameters are used when the manual tuning mode is selected. From the tuning parameter menu, keep pressing the Up (®) and Down (™) keys for five (5) seconds at the same time while pressing the SEL key. Then the system moves to the filter tuning area.

4.10 User Parameter

Move the system to the top menu (i.e., UP01) of the user parameter area, using the MODE key. Select a desired parameter menu (symbol) by means of the Up (®) or Down (™) key. To display the set value, press the Up (®) key.
For details of each parameter, see Para. 5.8.

- How to change parameter value

[Step 1] After displaying the set value, press the SEL and SET keys at the same time.

[Step 2] The lower one (1) digit of the set value flickers and the change mode takes effect. Each time the SEL key is pressed, the flickering digit moves to the left.

[Step 3] Change the set value by means of the Up (®) and Down (™) keys.

[Step 4] The set value is updated by pressing the SET key at the same time that the change mode terminates.

[Step 5] The parameter menu can be selected in turn by means of the Up (®) and Down (™) keys. When the MODE key is pressed, the system returns to the status display area.

Operation Guide	Section 5

5.1 Speed Control Mode Operation 3
5.1.1 Example Connections 3
5.1.2 I/O Signal 4
5.1.3 Operation 13
5.2 Current Control Mode Operation 15
5.2.1 Example Connections 15
5.2.2 I/O Signal 16
5.2.3 Operation 23
5.3 Position Control Mode Operation 25
5.3.1 Example Connections 25
5.3.2 I/O Signal 26
5.3.3 Operation 34
5.4 Speed / Current / Position Control Mode Operation 35
5.4.1 Example Connections 35
5.4.2 I/O Signal 36
5.4.3 Operation 42
5.5 Direct Feed Mode Operation 43
5.5.1 Example Connections 43
5.5.2 I/O Signal 44
5.5.3 Operation 51
5.6 Draw Control Mode Operation 53
5.6.1 Example Connections 53
5.6.2 I/O Signal 54
5.6.3 Operation 59
5.7 VLBus-V Mode Operation 60
5.7.1 Example Connections 60
5.7.2 I/O Signal 62
5.7.3 Amplifier I/O Assignment Table 65
5.7.4 Setting Axis Numbers 67
5.7.5 Confirming Axis Numbers 69
5.7.6 Cautions on Using Optical Cable 70
5.7.7 Connecting Optical Communication Cable 72

5.8 User Parameter 73
5.8.1 Standard (Control Mode 1 ~ 6)..... 73
5.8.2 VLBus–V (Control Mode 31) 89
5.9 Special Sequence..... 101
5.9.1 Setting Special Sequence 101
5.9.2 How to Use Special Sequence..... 103
5.9.3 Special Sequence I/O Signal 104

5.1 Speed Control Mode Operation

5.1.1 Example Connections

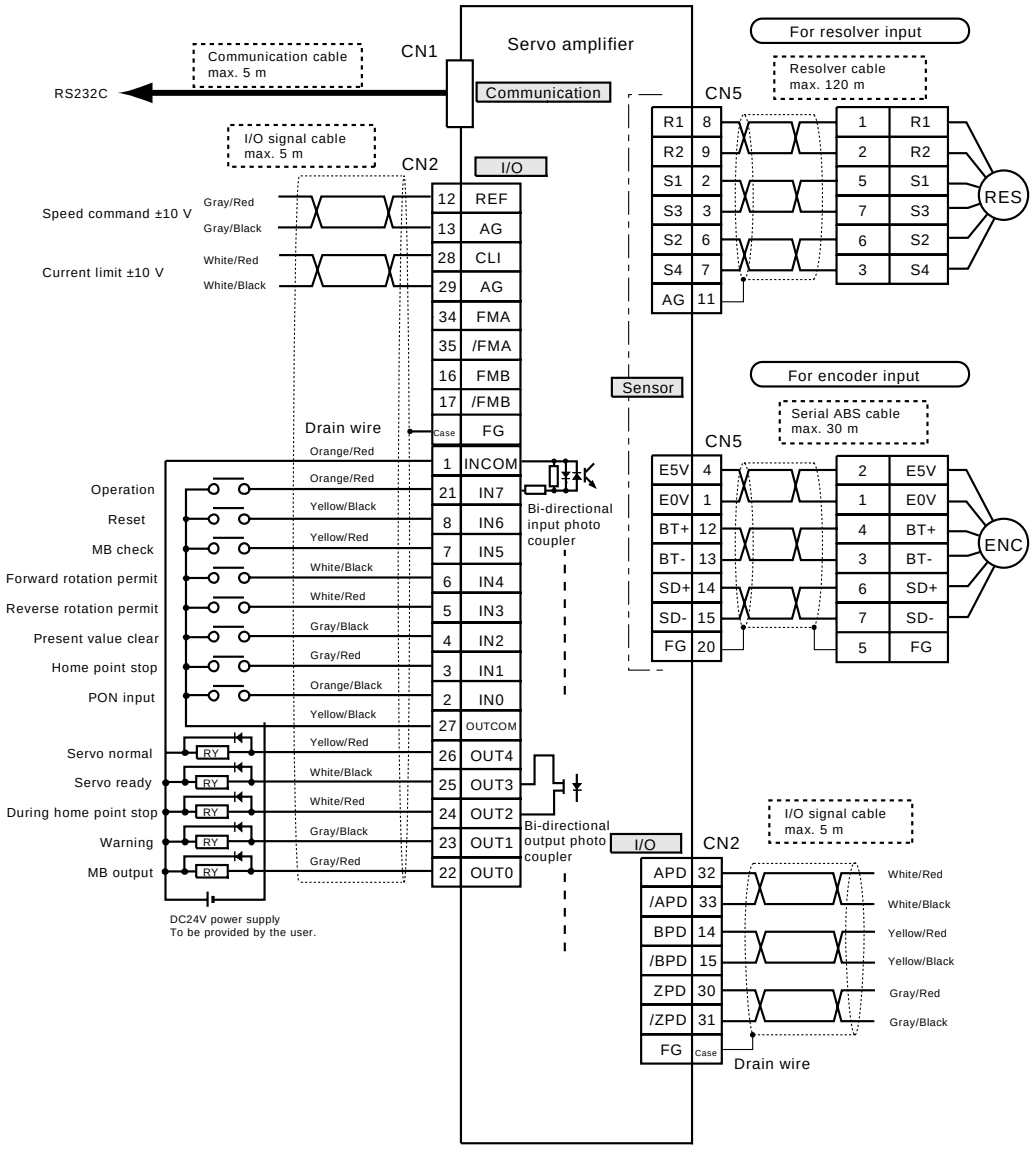

Connector code	Cable name	Cable type	Remarks
CN1	RS232C communication cable	CV01C + LAN cable	
CN2	I/O signal cable	CV02C–©©©A,B	
CN5	Standard resolver cable	CV05G–©©©A,B,C,Z	Select either one.
	V ZA motor resolver cable	CV05H–©©©A,C	
	Standard serial ABS cable	CV05D–©©©A,B,C,Z	
	V ZA motor serial ABS cable	CV05E—©©©A,C	

5.1.2 I/O Signal

Type	Name	Terminal No.	Function	Electric specification
Commu-nication CN1	RS232C		Connect when the RS232C interface and personal computer (SHANX) are used.	
Analog input CN2	Speed command (REF)	12P (REF) 13P (AG)	Inputs the speed command. For zero adjustment and scale adjustment, use AP01 and AP02, respectively. The motor rotates forward with the positive voltage polarity. To change the rotating direction, use UP15. The voltage value can be monitored on the status display [cF---]. To specify the acceleration/deceleration curve and time, use UP09 through UP11.	Vin: ±11.5 Vmax Input resistance 49 kΩ AD resolution: ±2048 (at ±11.5 V)
	Current limit (CLI)	28P (CLI) 29P (AG)	When “UP34 (limit changeover method) = ©0©” is specified with current limit changeover CCD (special sequence) set ON, this input voltage can be used as the current limit value. Use parameter AP03 for zero adjustment and AP04 for scale adjustment. The voltage polarity is unrelated to the setting. The input voltage can be monitored on the status display [cc---].	
24 V input CN2	Operation (RUN)	21P (IN7)	When this signal is turned on, the equipment is ready for an operation (servo lock). When it is turned off, the equipment enters a servo free status. This signal also serves to turn on and off the brake output.	ON voltage: 19.2 V ~ 26.4 V OFF voltage: 3 V (max.) ON current: 6 mA (TYP) Min. ON/OFF width: 1 ms (at 24 V)
	Reset (RST)	8P (IN6)	Resets an alarm. (Kept ON for more than 30 ms.) When an overheat alarm (such as AL01, AL05, AL08, AL09 and AL17) has generated, it cannot be reset until the temperature drops to the specified level.	

Type	Name	Terminal No.	Function	Electric specification
24 V input CN2	MB check (MBIN)	7P (IN5)	Enter the holding brake operation check signal (i.e., brake contactor auxiliary contact). For the connecting method, see the descriptions on the power circuit.	ON voltage: 19.2 V ~ 26.4 V OFF voltage: 3 V (max.) ON current: 6 mA (TYP) Min. ON/OFF width: 1 ms (at 24 V)
	Forward rotation permit (FEN)	6P (IN4)	Accepts the speed command for motor forward rotation. Even if the rotating direction is reversed by means of UP15, only the forward rotation command is accepted. Connect the normal close contact of the machine forward rotation side limit switch.	
	Reverse rotation permit (REN)	5P (IN3)	Accepts the speed command for motor reverse rotation. Even if the rotating direction is reversed by means of UP15, only the reverse rotation command is accepted. Connect the normal close contact of the machine reverse rotation side limit switch.	
	Present value clear (PCLR)	4P (IN2)	PCLR becomes valid when it is turned on for more than 30 ms. When the resolver ABS specification is selected with UP12 = 10, the present value is cleared. When UP12 = 11, only the rotation count is cleared. When other ABS sensor is selected with UP12 = 10 or 11, the present value is cleared. When the clear command is executed, the home point is memorized. When the standard specification (i.e., incremental specification) is selected, the present value is cleared irrespective of UP12 setting.	
	Home point stop (ZSTP)	3P (IN1)	When this signal turns on during speed command operation, the motor stops at the next motor home point with the HOME (i.e., during home point stop) signal output.	

Type	Name	Terminal No.	Function	Electric specification
24 V input CN2	Main circuit ON (PON)	2P (IN0)	This signal turns on the MC output and main circuit contactor. When the PN power source is fully charged, servo ready RDY turns on. When the RDY turns off, the main circuit contactor turns off mechanically. This signal should be integrated into the emergency stop circuit.	ON voltage: 19.2 V ~ 26.4 V OFF voltage: 3 V (max.) ON current: 6 mA (TYP) Min. ON/OFF width: 1 ms (at 24 V)
24 V output CN2	Servo normal (SST)	26P (OUT4)	This signal turns on about three (3) seconds after the AC power is turned on. If an alarm has occurred, this signal turns off, which turns on again with the reset (RST) input.	ON voltage: 1.5 V or less at 50 mA (max. current) OFF leak current: 0.1 µA (max)
	Servo ready (RDY)	25P (OUT3)	This signal turns on when the servo normal (SST) is ON, the main circuit ON (PON) is input and the PN power supply is turned on.	
	During home point stop (HOME)	24P (OUT2)	This signal turns on when the motor stops at the home point during home point stop operation (ZSTP). The servo must be locked at this time.	
	Warning (WARN)	23P (OUT1)	This signal turns on when the battery voltage drops, the home point is not saved, an electronic thermal warning is output, a reverse-current absorption overheat warning is output, a fin overheat warning is output, or a pulse command warning is output. Once the factor causing a warning has been canceled, this signal turns off. You can continue the operation even while a warning is output.	
	MB output (MBO)	22P (OUT0)	Holding brake control output. For the operation sequence, see Section 2.	

Type	Name	Terminal No.	Function	Electric specification
Pulse output/ Differential output CN2	(APD) (/APD) (BPD) (/BPD) (ZPD) (/ZPD)	32P (APD), 33P (/APD), 14P (BPD), 15P (/BPD), 30P (ZPD), 31P (/ZPD)	This signal outputs the motor position, using phase AB pulse of 90° phase difference. Phase Z is the motor home point. When a resolver is used as the motor sensor, one (1) pulse is output per half a turn. When an encoder is used as the motor sensor, one (1) pulse is output per one (1) full turn. When the resolver is used as the motor sensor, the number of pulses per one (1) full turn of the motor can be figured out from the following expression. APD (BPD) = [24000] × [1/4] × [UP05/UP04] When the 17-bit encoder is used as the motor sensor, the number of pulses per one (1) full turn of the motor can be calculated from the following expression. APD (BPD) = [131072] × [1/4] × [UP05/UP04] The forward/reverse pulse can be selected by means of UP17. It is also possible to select the external display differential output or ABS output, using UP18.	Differential output equivalent to AM26LS31 Vout: 3 V (TYP), 2 V (MIN) at 20 mA output

- Electronic gear
  Based on the set values of UP04 and UP05, the pulse count with any weight per motor revolution can be calculated and output.

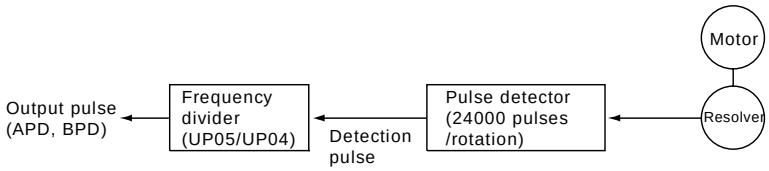

<Example setting>
When you wish to output 2000 pulses/rotation with phase AB pulse, multiply the resolution by four (4) times to obtain the forward/reverse rotation pulse count, then obtain the 2000 × 4 = 8000 pulses per rotation. When a resolver is used as the motor sensor, set the electronic gear in the following manner because the pulse count per rotation is 24000.

UP05/UP04 = 8000/24000 = 1/3

Thus, specify “3” for UP04, “1” for UP05, “01” for UP17 and “0000” for UP18.

* Note that when a 17-bit serial ABS encoder is used, the pulse count per rotation is 131072.

- Forward rotation, reverse rotation, driving, absorption operation
  Concerning the motor operation, the condition in which the motor is driving a load is called the “driving state.” On the contrary, the condition where the motor serves as a generator driven by a load is called the “absorption state.” In each state, the motor rotates forward and reverse, and a total of four (4) states are available.
  User parameters UP36 to UP39 are provided to limit the current supplied to each motor in individual states. The motor torque is proportionate to the current, and you can use these parameters to limit the torque at motor acceleration or deceleration.

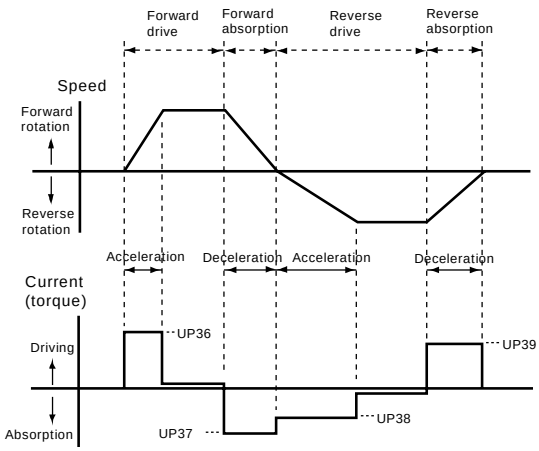

- Speed acceleration and deceleration
  Soft start (Linear acceleration/deceleration)
  A speed command for quick speed change causes sudden acceleration or deceleration of a motor, which can be leveled by setting the soft start time. Specify the acceleration/deceleration time from zero (0) to the maximum speed for UP09 and UP10. If a value other than zero (0) is specified for UP11 (S-type acceleration/deceleration), this parameter value is ignored and S-type acceleration/deceleration takes effect.

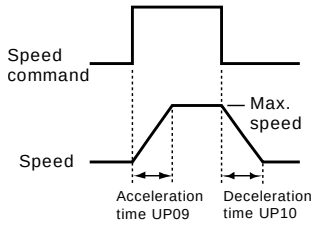

  S-type acceleration/deceleration
  Smoother acceleration/deceleration than the soft start is obtained. Specify the same time constant for both acceleration and deceleration. The time required to reach the target speed is 1.1 times the set value. Use UP11 for this purpose.

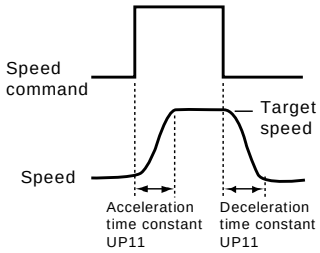

- Brake ON speed
  When using the holding brake, turn off the operation (IN7). Then the same brake is applied after linear or S-type deceleration up to the brake ON speed (UP14). One hundred (100) ms later, the servo turns off.

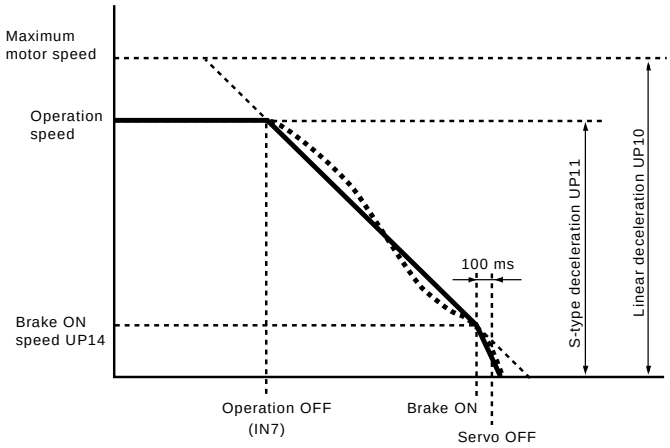

- Specified speed level
  Outputs when the motor revolution speed has reached the target revolution level specified by the speed command (REF). Use parameters UP29 and UP30 for the setting.

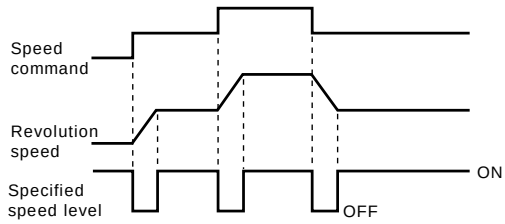

- Current limit
  When current limit changeover CCD (special sequence) is turned on based on the UP34 setting, current limit can be effected proportionate to the current limit (CLI) voltage. For the current limit value, CLI 10 V corresponds to the maximum current of 100 %.
  It is also possible to set a predetermined current limit, using the parameter.

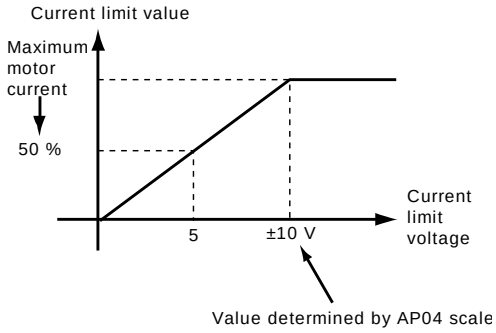

- Zero (0) adjustment (AP01) and scale adjustment (AP02) of speed command
  When the motor speed is taken as VR and the speed command voltage as REF, the following expression can be established.

  VR = AP02 × (REF + AP01)

  Though the motor is factory-set to zero (0) by means of AP01, it may turn a little if a speed command has an offset. When this happens, perform automatic zero (0) adjustment, taking the command offset into consideration.

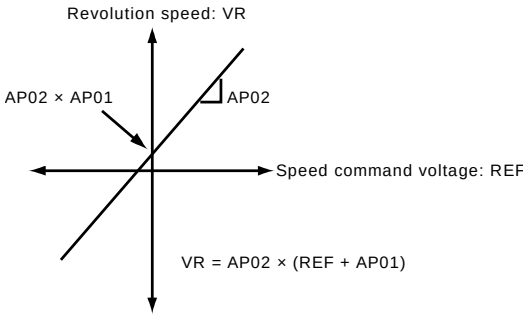

  The scale adjustment (AP02) is set to 1,500 min^{-1}/10 V. When the speed command is 3,000 min^{-1} at 10 V, specify “300.0” for AP02.

- Setting user controller position gain

  If a speed command is given form the positioning equipment illustrated below, adjust the position gain setting on the positioning equipment side. The speed loop frequency characteristic is automatically adjusted to an optimal value by specifying target loop gain TP02 to the same value as the position gain of the user controller and specifying the load inertia for TP03 in the auto-tuning standard mode (TP01 = 0). When the position gain has been changed due to hunting during adjustment, readjust the speed loop frequency characteristic.

  If the set position gain cannot be changed on the user's positioning equipment side, adjust with the servo amplifier scale (AP02).

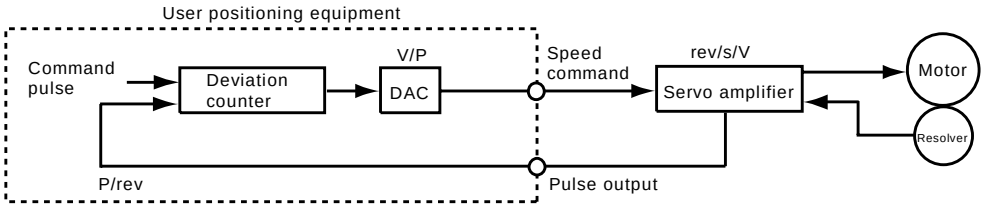

Position gain = P/rev × V/P × $\underbrace{\text{rev/s/V}}_{\text{Scale adjustment}}$

where,

P/rev:	Number of pulses per one (1) full turn of motor
V/P:	Output voltage of one (1) pulse
rev/s/V:	Rotation speed per second at 1 V

- Home point stop and during home point stop (how to set user controller's home point)
  The exact home point (or zero point) can be determined, using the home point stop input (ZSTP) and home point pulse (ZPD). Positioning control based on the home point pulse allows exact home point setting despite mechanical inertia or flow rate change during the home point setting. Unless the home point stop is turned off, normal speed control is inoperative and the motor will not start with a speed command.

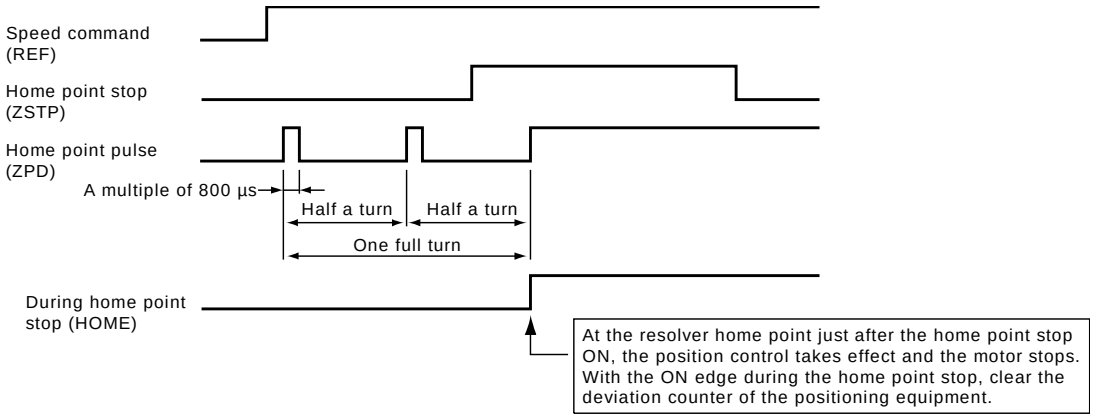

5.1.3 Operation

Operation steps	Description
Power ON	Alarm 26 generates. Note: When the option 3 (without HMI) specification is selected, parameter setting by the following key operation is not possible. Perform setting, using the personal computer tool (SHANX), etc.
↓	
Setting of user parameter: Specify “01” for UP01 and the motor code for UP02.	Press the MODE key to display UP-01. → ® (“0” is displayed.) → Press the SEL and SET keys at the same time. (“0” flickers.) → ® (Set “01”.) → Press the SET key. (Flickering stops.) → ® → UP-02 (“UP02” is displayed.) → ® (“0000” is displayed.) → Press the SEL and SET keys at the same time. (Rightmost “0” flickers.) → ® (Set the motor code.) → Press the SET key. (Flickering stops.)
↓	
Turn the power off and make sure that the entire display goes out. Then turn the power on again.	Data are set in UP01 and UP02.
↓	
Specify all required data for user parameters.	(Ex.) Resolver cable length for UP03, electronic gear for UP04 and UP05, current limit for UP08 and UP34, etc.
↓	
Turn on the operation signal.	The equipment is ready for an operation with the motor servo locked. When using a brake, make sure that it is open.
↓	
Zero adjustment of speed command.	Perform offset adjustment at 0 V command voltage, using adjustment parameter AP01.
↓	
Test operation with the speed command voltage.	The motor starts revolving. Perform check on the following points with a slow speed at first. • Motor revolving direction (UP15) • Hunting during operation • Vibration at motor stop • Impact during acceleration and deceleration • Motor speed for a command speed Perform auto-turning if necessary. As TP01 is factory-set to “0” (standard mode), specify the target loop gain for TP02 and load inertia magnification for TP03. Also specify values for UP09 through UP11 and UP15.

↓

Drop the speed command voltage to zero (0).	The motor stops revolving. To stop the motor completely, turn on the zero command signal (which is supported by the special sequence).

↓

Turn off the operation signal.	The motor enters a servo-free status. When a brake is used, make sure that it can be applied.

5.2 Current Control Mode Operation

5.2.1 Example Connections

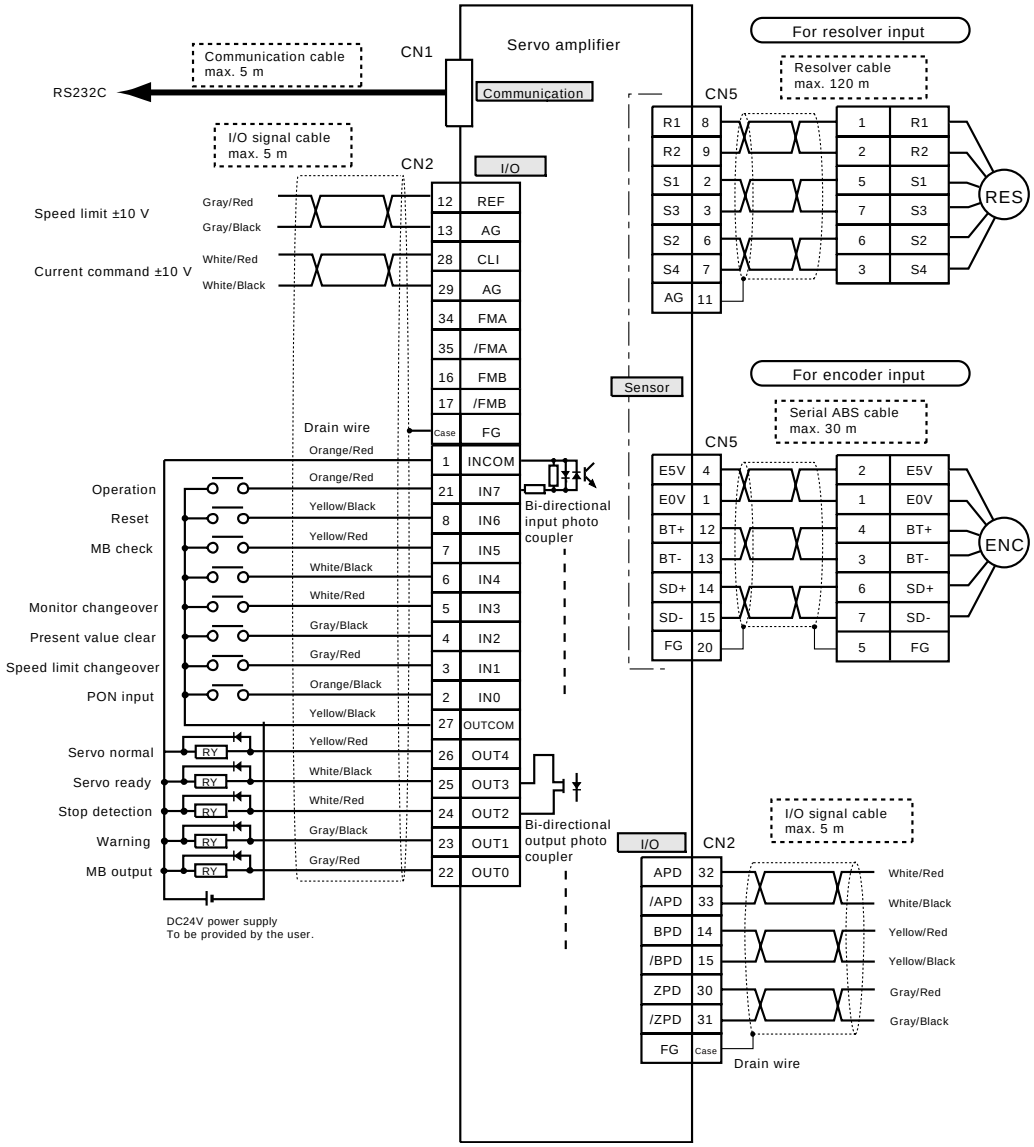

Connector code	Cable name	Cable type	Remarks
CN1	RS232C communication cable	CV01C + LAN cable	
CN2	I/O signal cable	CV02C–©©©A,B	
CN5	Standard resolver cable	CV05G–©©©A,B,C,Z	Select either one.
	V ZA motor resolver cable	CV05H–©©©A,C	
	Standard serial ABS cable	CV05D–©©©A,B,C,Z	
	V ZA motor serial ABS cable	CV05E—©©©A,C	

5.2.2 I/O Signal

Type	Name	Terminal No.	Function	Electric specification
Commu-nication CN1	RS232C		Connect when the RS232C interface and personal computer (SHANX) are used.	
Analog input CN2	Speed limit (REF)	12P (REF) 13P (AG)	When UP34 = ©©0 with limit changeover LCHG turned on, this input voltage is taken as the speed limit value. For zero adjustment and scale adjustment, use AP01 and AP02, respectively. The voltage polarity is unrelated to this setting. The input voltage can be monitored on the status display [cF---].	Vin: ±11.5 Vmax Input resistance 49 kΩ AD resolution: ±2048 (at ±11.5 V)
	Current command (CLI)	28P (CLI) 29P (AG)	Inputs the current command voltage. For zero adjustment and scale adjustment, use AP03 and AP04, respectively. The motor rotates forward with the positive voltage polarity. To reverse the torque generating direction, use UP15. The voltage value can be monitored on the status display [cc---].	
24 V input CN2	Operation (RUN)	21P (IN7)	Sets the motor ready to start. In the current limit control mode, the command value torque takes effect immediately without servo lock. When this signal is turned off, the motor enters a servo free status. This signal also serves to turn on and off the brake output.	ON voltage: 19.2 V ~ 26.4 V OFF voltage: 3 V (max.) ON current: 6 mA (TYP) Min. ON/OFF width: 1 ms (at 24 V)
	Reset (RST)	8P (IN6)	Resets an alarm. (Kept ON for more than 30 ms.) When an overheat alarm (such as AL01, AL05, AL08, AL09 and AL17) has generated, it cannot be reset until the temperature drops to the specified level.	

Type	Name	Terminal No.	Function	Electric specification
24 V input CN2	MB check (MBIN)	7P (IN5)	Enter the holding brake operation check signal (i.e., brake contactor auxiliary contact). For the connecting method, see the descriptions on the power circuit.	ON voltage: 19.2 V ~ 26.4 V OFF voltage: 3 V (max.) ON current: 6 mA (TYP) Min. ON/OFF width: 1 ms (at 24 V)
	–	6P (IN4)	Not used.	
	Monitor changeover (EXD)	5P (IN3)	Changes over the monitor display data between the digit of 100 and the digit of 1000 of UP18 (differential output type). When this signal is turned on, the digit of 100 data takes effect.	
	Present value clear (PCLR)	4P (IN2)	PLCR becomes valid when it is turned on for more than 30 ms. When the resolver ABS specification is selected with UP12 = 10, the present value is cleared. When UP12 = 11, only the rotation count is cleared. When other ABS sensor is selected with UP12 = 10 or 11, the present value is cleared. When the clear command is executed, the home point is memorized. When the standard specification (i.e., incremental specification) is selected, the present value is cleared irrespective of UP12 setting.	
	Speed limit changeover (LCHG)	3P (IN1)	When this signal is turned on, the speed limit is effected. Select the limit method by means of UP34 and UP35.	
	Main circuit ON (PON)	2P (IN0)	This signal turns on the MC output and main circuit contactor. When the PN power source is fully charged, servo ready RDY turns on. When the RDY turns off, the main circuit contactor turns off mechanically. This signal should be integrated into the emergency stop circuit.	

Type	Name	Terminal No.	Function	Electric specification
24 V output CN2	Servo normal (SST)	26P (OUT4)	This signal turns on about three (3) seconds after the AC power is turned on. If an alarm has occurred, this signal turns off, which turns on again with the reset (RST) input.	ON voltage: 1.5 V (max.) at 50 mA (max. current) OFF leak current: 0.1 µA (max)
	Servo ready (RDY)	25P (OUT3)	This signal turns on when the servo normal (SST) is ON, the main circuit ON (PON) is input and the PN power supply is turned on.	
	Stop detection (STA)	24P (OUT2)	This signal turns on when the motor speed becomes slower than the set value of UP28 (stop detection speed).	
	Warning (WARN)	23P (OUT1)	This signal turns on when the battery voltage drops, the home point is not saved, an electronic thermal warning is output, a reverse-current absorption overheat warning is output, a fin overheat warning is output, or a pulse command warning is output. Once the factor causing a warning has been canceled, this signal turns off. You can continue the operation even while a warning is output.	
	MB output (MBO)	22P (OUT0)	Holding brake control output. For the operation sequence, see Section 2.	

Type	Name	Terminal No.	Function	Electric specification
Pulse output/ Differential output CN2	(APD) (/APD) (BPD) (/BPD) (ZPD) (/ZPD)	32P (APD), 33P (/APD), 14P (BPD), 15P (/BPD), 30P (ZPD), 31P (/ZPD)	This signal outputs the motor position, using phase AB pulse of 90° phase difference. Phase Z is the motor home point. When a resolver is used as the motor sensor, one (1) pulse is output per half a turn. When an encoder is used as the motor sensor, one (1) pulse is output per one (1) full turn. When the resolver is used as the motor sensor, the number of pulses per one (1) full turn of the motor can be figured out from the following expression. APD (BPD) = [24000] × [1/4] × [UP05/UP04] When the 17-bit encoder is used as the motor sensor, the number of pulses per one (1) full turn of the motor can be calculated from the following expression. APD (BPD) = [131072] × [1/4] × [UP05/UP04] The forward/reverse pulse can be selected by means of UP17. It is also possible to select the external display differential output or ABS output, using UP18.	Differential output equivalent to AM26LS31 Vout: 3 V (TYP), 2 V (MIN) at 20 mA output

- Brake ON speed in current control mode
  When using a holding brake sequence which is configured internally in the amplifier, the soft deceleration function will not work even if “1” is specified for UP13 (holding brake operation) in the current control mode.
  When the operation (RUN) signal is turned off, the motor slows down to the level specified by UP14 (brake ON speed), where the holding brake is applied and 100 ms later, the servo is turned off.
  In the current control mode, the motor speed is affected by load, and it is necessary to manage the speed control unit in the control system. Desirably, holding brake should be controlled externally. It is recommended to turn on and off the current command (CLI) and holding brake in the entire system operation stop sequence.

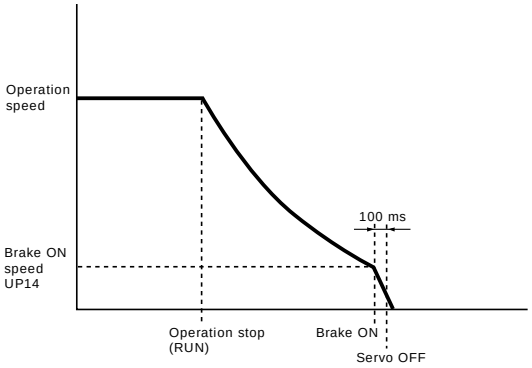

- Driving/absorption detection width
  Concerning the motor operation, the condition in which the motor is driving a load is called the “driving state.” On the contrary, the condition where the motor serves as a generator driven by a load is called the “absorption state.” In each state, the motor rotates forward and reverse, and a total of four (4) states are available.
  The motor operation state can be identified with the output signals; FOR (during forward rotation), REV (during reverse rotation), TRQP (during driving) and TRQM (during absorption).
  For the output signals during driving and absorption, specify the detection range and signal chattering prevention by means of UP28 (stop detection speed) and UP40 (driving/absorption detection width).
  When the motor speed is less than the stop detection speed, or when the current running through the motor falls under the driving/absorption detection width, this signal is not output.

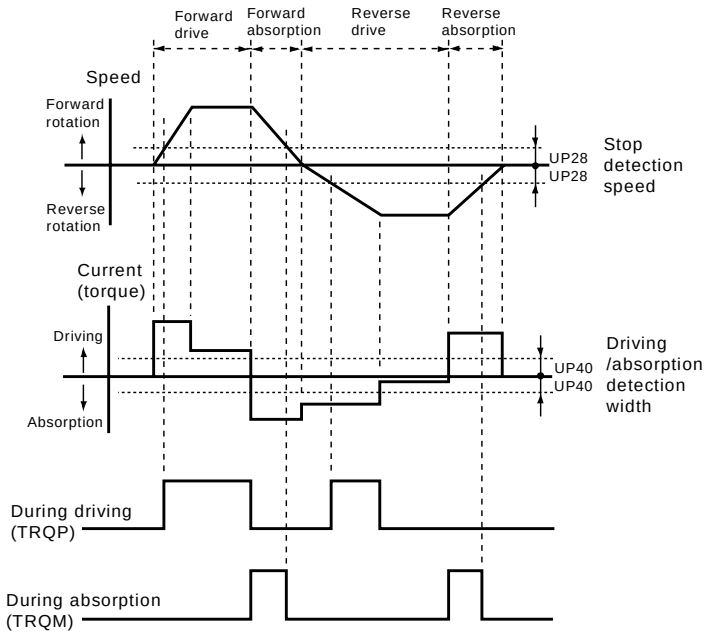

- Zero (0) adjustment (AP03) and scale adjustment (AP04) of current command
  When the motor current is taken as IQR and the current command voltage as CLI, the following expression can be established.

  IQR = AP04 × (CLI + AP03)

  Though the motor is factory-set to zero (0) by means of AP03, a little torque may be generated if a speed command has an offset. When this happens, perform automatic zero (0) adjustment, taking the command offset into consideration.

  AP04 (scale adjustment) is set to 1 A/V.

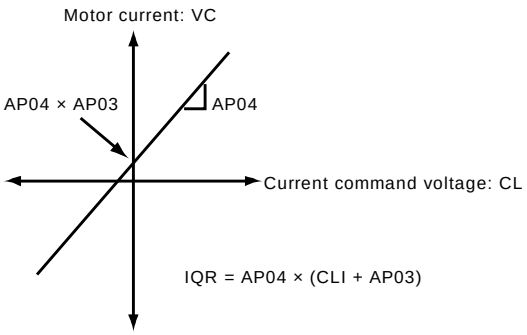

- Machine protection by speed limit
  In the current control mode, the motor speed fluctuates with load torque. When the load torque is smaller, compared with the current command value, the motor speed rises to the maximum level. To avoid this, use the motor in the system under speed control. The speed limit function is provided for safety purpose. When sequence input limit changeover LCHG is turned on, the speed can be limited by the external input (REF) using UP34 or by the set value of UP35.

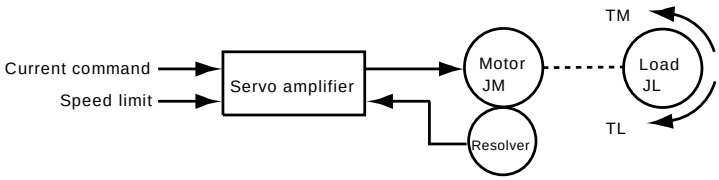

$V = (TM - TL) \div (JM + JL) \times t$

where,

V: Motor speed per second “t” seconds later

TM: Motor torque based on current command

JM: Motor inertia

t: Duration when TM is effected (seconds)

TL: Load torque

JL: Load inertia

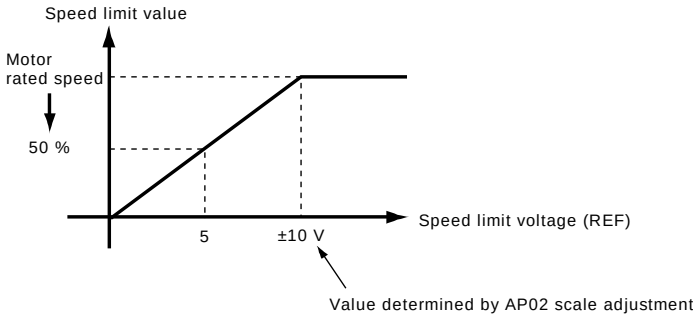

- “During forward rotation”, “during reverse rotation” and “stop detection” outputs
  The stop detection (STA) turns on when the motor speed falls under the range specified by UP28 (stop detection speed).
  Outside this range, either FOR (during forward rotation) or REV (during reverse rotation) is detected and output. The output signals during forward rotation and reverse rotation are not supported by the standard sequence. They are supported by the special sequence.

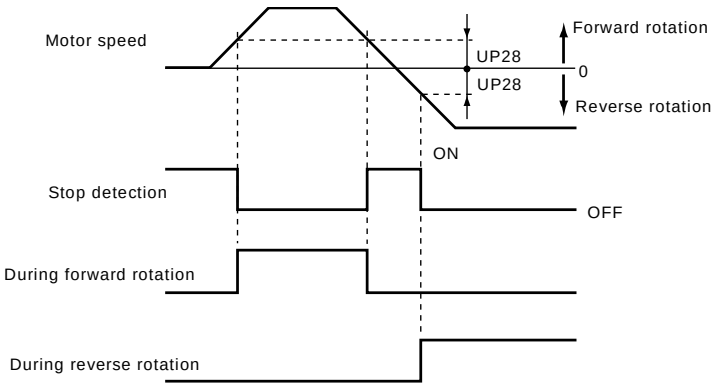

5.2.3 Operation

Operation steps	Description
Power ON	Alarm 26 generates. Note: When the option 3 (without HMI) specification is selected, parameter setting by the following key operation is not possible. Perform setting, using the personal computer tool (SHANX), etc.
↓	
Setting of user parameter: Specify “02” for UP01 and the motor code for UP02.	Press the MODE key to display UP-01. → ® (“0” is displayed.) → Press the SEL and SET keys at the same time. (“0” flickers.) → ® (Set “02”.) → Press the SET key. (Flickering stops.) → ® → UP-02 (“UP02” is displayed.) → ® (“0000” is displayed.) → Press the SEL and SET keys at the same time. (Rightmost “0” flickers.) → ® (Set the motor code.) → Press the SET key. (Flickering stops.)
↓	
Turn the power off and make sure that the entire display goes out. Then turn the power on again.	Data are set in UP01 and UP02.
↓	
Specify all required data for user parameters.	(Ex.) Resolver cable length for UP03, electronic gear for UP04 and UP05, current limit for UP34, etc.
↓	
Turn on the operation signal.	The motor is ready for an operation and starts revolving with minimum torque of the current command. The motor speed is not controlled. Be sure to set the speed limit value. When using a brake, make sure that it is open.
↓	
Zero adjustment of current command.	Perform offset adjustment at current command voltage 0 V, using analog I/O adjustment parameter AP03. Both automatic and manual zero adjustment functions are available.
↓	
Test operation with the current command voltage.	The motor revolves with torque of the current command. Perform check on the following points with a slow speed at first. • Motor revolving direction (UP15) • Motor speed for a speed limit value (UP35) Set the current command scale, using analog I/O adjustment parameter AP04 if necessary. The scale to be set is the weight per unit voltage of the command voltage. Check for the torque constant in the catalog or other data sheets, then determine the command voltage by converting a required torque into a corresponding current value.

↓

Drop the current command voltage to zero (0).	The motor stops revolving.

↓

Turn off the operation signal.	The motor enters a servo-free status. When a brake is used, make sure that it can be applied.

5.3 Position Control Mode Operation

5.3.1 Example Connections

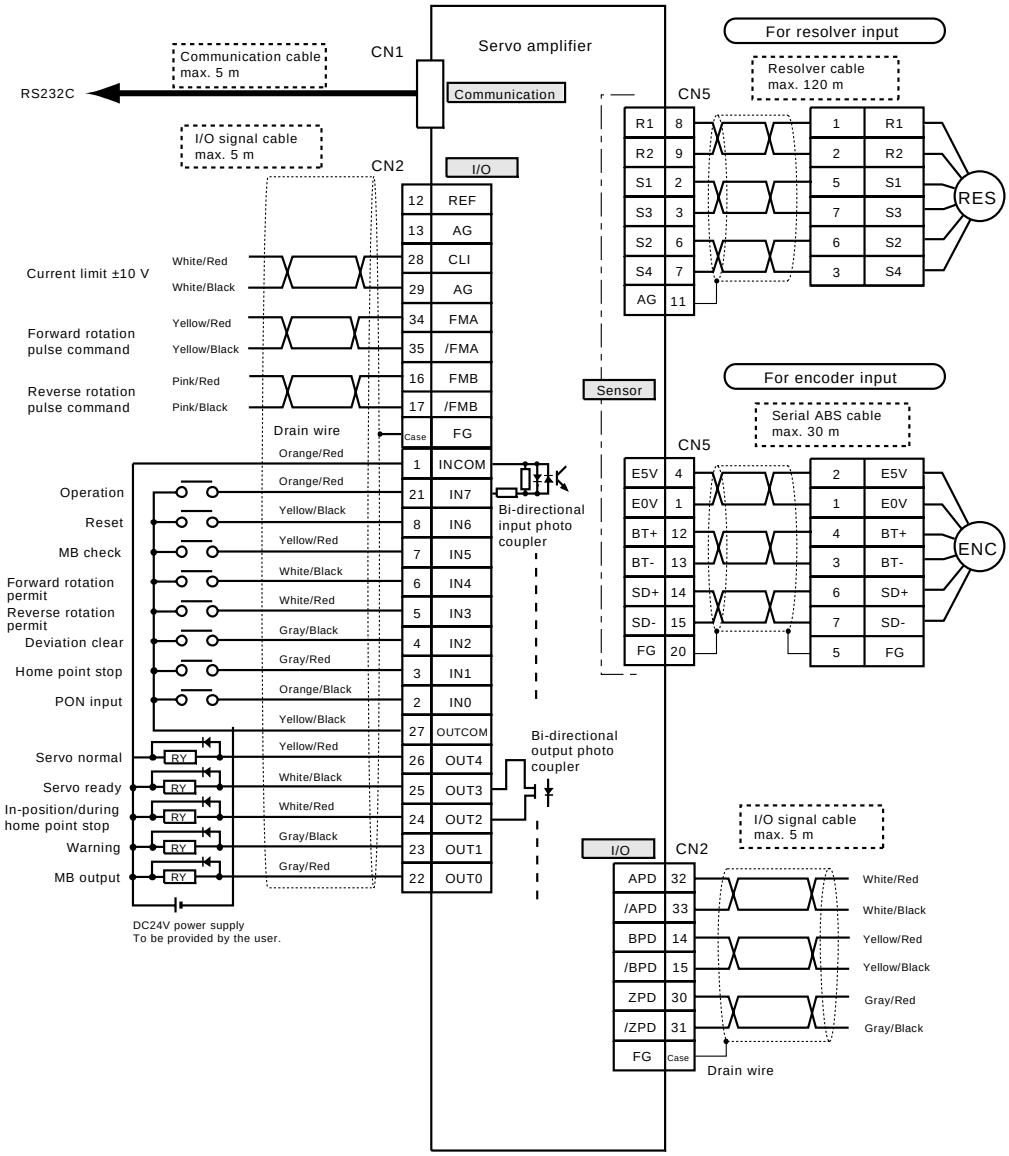

Connector code	Cable name	Cable type	Remarks
CN1	RS232C communication cable	CV01C + LAN cable	
CN2	I/O signal cable	CV02C–©©©A,B	
CN5	V Standard resolver cable	CV05G–©©©A,B,C,Z	Select either one.
	V ZA motor resolver cable	CV05H–©©©A,C	
	V Standard serial ABS cable	CV05D–©©©A,B,C,Z	
	V ZA motor serial ABS cable	CV05E—©©©A,C	

5.3.2 I/O Signal

Type	Name	Terminal No.	Function	Electric specification
Commu-nication CN1	RS232C		Connect when the RS232C interface and personal computer (SHANX) are used.	
Analog input CN2	Current limit (CLI)	28P (CLI) 29P (AG)	When UP34 = ©0© with current limit changeover CCD (special squence) turned on, this input voltage is taken as the current limit value. For zero adjustment and scale adjustment, use AP03 and AP04, respectively. The voltage polarity is unrelated to this setting. The input voltage can be monitored on the status display [cc---].	Vin: ±11.5 V (max.) Input resistance 49 kΩ AD resolution: ±2048 (at ±11.5 V)
Pulse input CN2	Position command (FMA), (/FMA), (FMB), (/FMB)	34P (FMA)/ 35P (/FMA)/ 16P (FMB)/ 17P (/FMB)	Inputs the forward rotation pulse (FMA, /FMA), reverse rotation pulse (FMB, /FMB) and pulse command. Specify the travel distance per pulse for UP04/UP05, and the pulse command type (phase AB, forward/reverse pulse, pulse and forward/reverse signal) and polarity for UP16. Specify the revolving direction for UP19 (position control polarity).	ON voltage: 3.5 V ~ 5.5 V OFF voltage: 2 V (max.) ON current: 16 mA (TYP) at 5 V
24 V input CN2	Operation (RUN)	21P (IN7)	Sets the motor ready to start (i.e., servo lock state). When this signal is turned off, the motor enters a servo free status. This signal also serves to turn on and off the brake output.	ON voltage: 19.2 V ~ 26.4 V OFF voltage: 3 V (max.) ON current: 6 mA (TYP) Min. ON/OFF width: 1 ms (at 24 V)
	Reset (RST)	8P (IN6)	Resets an alarm. (Kept ON for more than 30 ms.) When an overheat alarm (such as AL01, AL05, AL08, AL09 and AL17) has generated, it cannot be reset until the temperature drops to the specified level.	
	MB check (MBIN)	7P (IN5)	Enter the holding brake operation check signal (i.e., brake contactor auxiliary contact). For the connecting method, see the descriptions on the power circuit.	

Type	Name	Terminal No.	Function	Electric specification
24 V input CN2	Forward rotation permit (FEN)	6P (IN4)	Accepts the speed command for motor forward rotation. Even if the rotating direction is reversed by means of UP15, only the forward rotation command is accepted. Connect the normal close contact of the machine forward rotation side limit switch.	ON voltage: 19.2 V ~ 26.4 V OFF voltage: 3 V (max.) ON current: 6 mA (TYP) Min. ON/OFF width: 1 ms (at 24 V)
	Reverse rotation permit (REN)	5P (IN3)	Accepts the speed command for motor reverse rotation. Even if the rotating direction is reversed by means of UP15, only the reverse rotation command is accepted. Connect the normal close contact of the machine reverse rotation side limit switch.	
	Deviation clear (ECLR)	4P (IN2)	Zero-clears the positional deviation counter with the ON edge.	
	Home point stop (ZSTP)	3P (IN1)	When this signal turns on during speed command operation, the motor stops at the next motor home point with the HOME (i.e., during home point stop) signal output.	
	Main circuit ON (PON)	2P (IN0)	This signal turns on the MC output and main circuit contactor. When the PN power source is fully charged, servo ready RDY turns on. When the RDY turns off, the main circuit contactor turns off mechanically. This signal should be integrated into the emergency stop circuit.	

Type	Name	Terminal No.	Function	Electric specification
24 V output CN2	Servo normal (SST)	26P (OUT4)	This signal turns on about three (3) seconds after the AC power is turned on. If an alarm has occurred, this signal turns off, which turns on again with the reset (RST) input.	ON voltage: 1.5 V (max.) at 50 mA (max. current) OFF leak current: 0.1 µA (max)
	Servo ready (RDY)	25P (OUT3)	This signal turns on when the servo normal (SST) is ON, the main circuit ON (PON) is input and the PN power supply is turned on.	
	In-position/during home point stop (INP/HOME)	24P (OUT2)	The INP signal turns on when the positional deviation becomes less than the set value of UP07 (in-position width). The minimum ON time of the signal can be set by means of UP47 (in-position timer). The HOME signal turns on when the motor speed becomes less than the set value of UP28 (stop detection speed). It also turns on when the motor has stopped at the home point during home point stop operation (ZSTP). At this time, the servo must be locked.	
	Warning (WARN)	23P (OUT1)	This signal turns on when the battery voltage drops, the home point is not saved, an electronic thermal warning is output, a reverse-current absorption overheat warning is output, a fin overheat warning is output, or a pulse command warning is output. Once the factor causing a warning has been canceled, this signal turns off. You can continue the operation even while a warning is output.	
	MB output (MBO)	22P (OUT0)	Holding brake control output. For the operation sequence, see Section 2.	

Type	Name	Terminal No.	Function	Electric specification
Pulse output/ Differential output CN2	(APD) (/APD) (BPD) (/BPD) (ZPD) (/ZPD)	32P (APD), 33P (/APD), 14P (BPD), 15P (/BPD), 30P (ZPD), 31P (/ZPD)	This signal outputs the motor position, using phase AB pulse of 90° phase difference. Phase Z is the motor home point. When a resolver is used as the motor sensor, one (1) pulse is output per half a turn. When an encoder is used as the motor sensor, one (1) pulse is output per one (1) full turn. When the resolver is used as the motor sensor, the number of pulses per one (1) full turn of the motor can be figured out from the following expression. APD (BPD) = [24000] × [1/4] × [UP05/UP04] When the 17-bit encoder is used as the motor sensor, the number of pulses per one (1) full turn of the motor can be calculated from the following expression. APD (BPD) = [131072] × [1/4] × [UP05/UP04] The forward/reverse pulse can be selected by means of UP17. It is also possible to select the external display differential output or ABS output, using UP18.	Differential output equivalent to AM26LS31 Vout: 3 V (TYP), 2 V (MIN) at 20 mA output

- Pulse command type
  Photo coupler input 5 V, 16 mA

<u>Forward/reverse pulse command input:</u>
The forward/reverse pulse is factory-set by means of UP16. Specify both pulse width and pulse interval to 1 µs or over. (Max. 500 kpps)

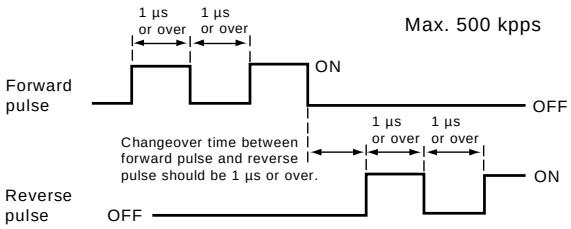

<u>Phase AB pulse command input:</u>
When parameter UP16 (pulse command type) is changed over, phase AB input is selected to use the input pulse by multiplying four (4) times. Keep the delay/advance phase to 2 µs or over. (Max. 125 kpps)

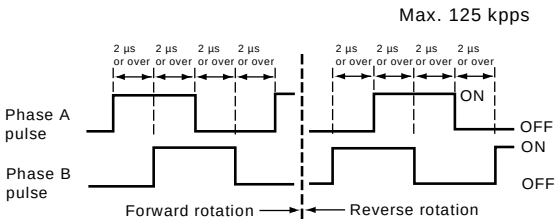

<u>Pulse command and forward/reverse signal input:</u>
When parameter UP16 (pulse command type) is changed over, the pulse command input mode or forward/reverse signal input mode can be changed over. Specify both pulse width and pulse interval to 1 µs or over. (Max. 500 kpps)

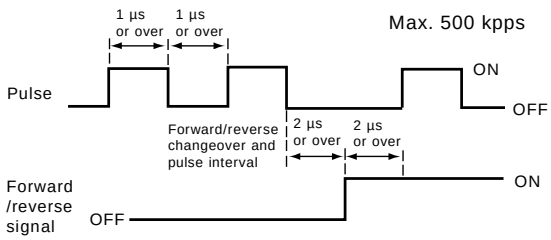

- Forward rotation permit and reverse rotation permit
  The forward rotation permit/reverse rotation permit signal is used for the extreme forward or reverse limit. Though the logic can be reversed by means of UP44, use the normal close input usually.

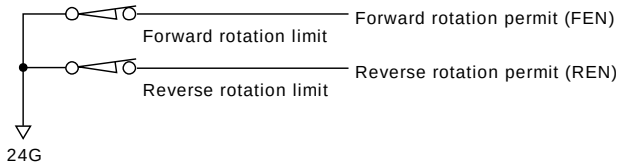

Immediately after the permit signal has turned off, the command pulse is intercepted and the motor decelerates and stops.
The deceleration distance (i.e., shaded area) in the right figure can be obtained from the following expression.

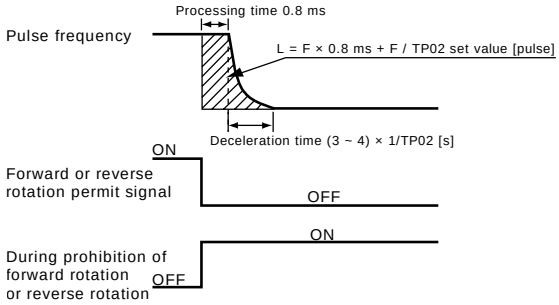

L = F × 0.8 ms + F / TP02 set value [pulse]

where,

L: Stop distance [pulse]
F: Pulse frequency [pps]
TP02: Position gain [rad/s]

- Home point setting

  The exact home point (or zero point) can be determined, using the home point stop input and home point pulse (ZPD). Positioning control based on the home point pulse allows exact home point setting despite mechanical inertia or flow rate change during the home point setting.

  Unless the home point stop input is turned off, normal speed control is inoperative and the motor will not start with a pulse command.

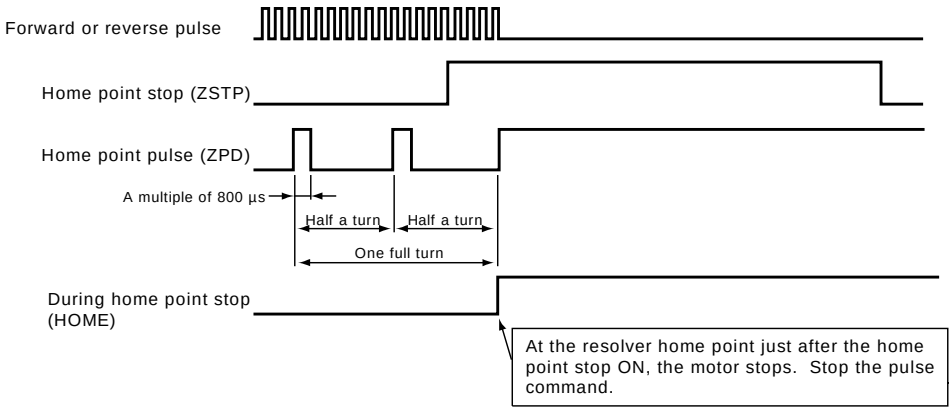

- Current limit

  Based on the setting of UP34, either of the following three (3) current limit methods can be selected.

  (1) Use of analog input voltage CLI.
  (2) Selection of UP08 (UP36 ~ UP39) parameter setting at all times.
  (3) Validation of UP08 (UP36 ~ UP39) parameter setting by turning on current limit changeover CCD.

  * UP36 through UP39 are used for setting four (4)-step current limit.

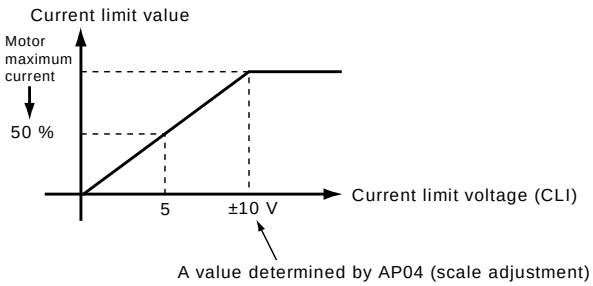

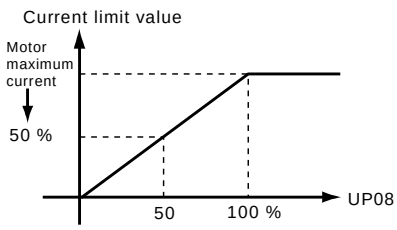

- In-position time
  The time ranging from stop of pulse input to ON of in-position signal is about five (5) times the inverse number of position gain.

×

In-position time = Stop time + Processing time

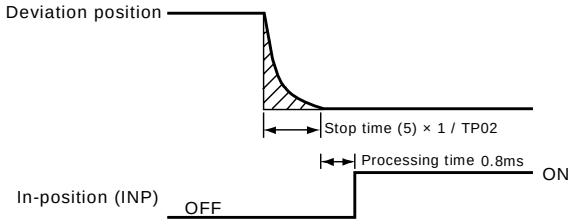

5.3.3 Operation

Operation steps	Description
Power ON	Alarm 26 generates. Note: When the option 3 (without HMI) specification is selected, parameter setting by the following key operation is not possible. Perform setting, using the personal computer tool (SHANX), etc.
↓	
Setting of user parameter: Specify “03” for UP01 and the motor code for UP02.	Press the MODE key to display UP-01. → ® (“0” is displayed.) → Press the SEL and SET keys at the same time. (“0” flickers.) → ® (Set “03”.) → Press the SET key. (Flickering stops.) → ® → UP-02 (“UP02” is displayed.) → ® (“0000” is displayed.) → Press the SEL and SET keys at the same time. (Rightmost “0” flickers.) → ® (Set the motor code.) → Press the SET key. (Flickering stops.)
↓	
Turn the power off and make sure that the entire display goes out. Then turn the power on again.	Data are set in UP01 and UP02.
↓	
Specify all required data for user parameters.	(Ex.) Resolver cable length for UP03, electronic gear for UP04 and UP05, speed limit for UP34, pulse command for UP16, output type for UP17, differential output type for UP18, etc.
↓	
Turn on the operation signal.	The motor is ready for an operation and servo-locked. When using a brake, make sure that it is open.
↓	
Enter the command pulse train, and turn on the forward rotation permit and reverse rotation permit signals.	The motor starts revolving. At first, perform check on the operating condition with a low speed pulse train. Execute auto-turning if necessary. Parameter TP01 is factory-set to zero (0; standard mode). Specify the target loop gain for TP02 and load inertia magnification for TP03.
↓	
Stop the command pulse train.	The motor stops revolving.
↓	
Turn off the operation signal.	The motor enters a servo-free status. When a brake is used, make sure that it can be applied.

5.4 Speed / Current / Position Control Mode Operation

5.4.1 Example Connections

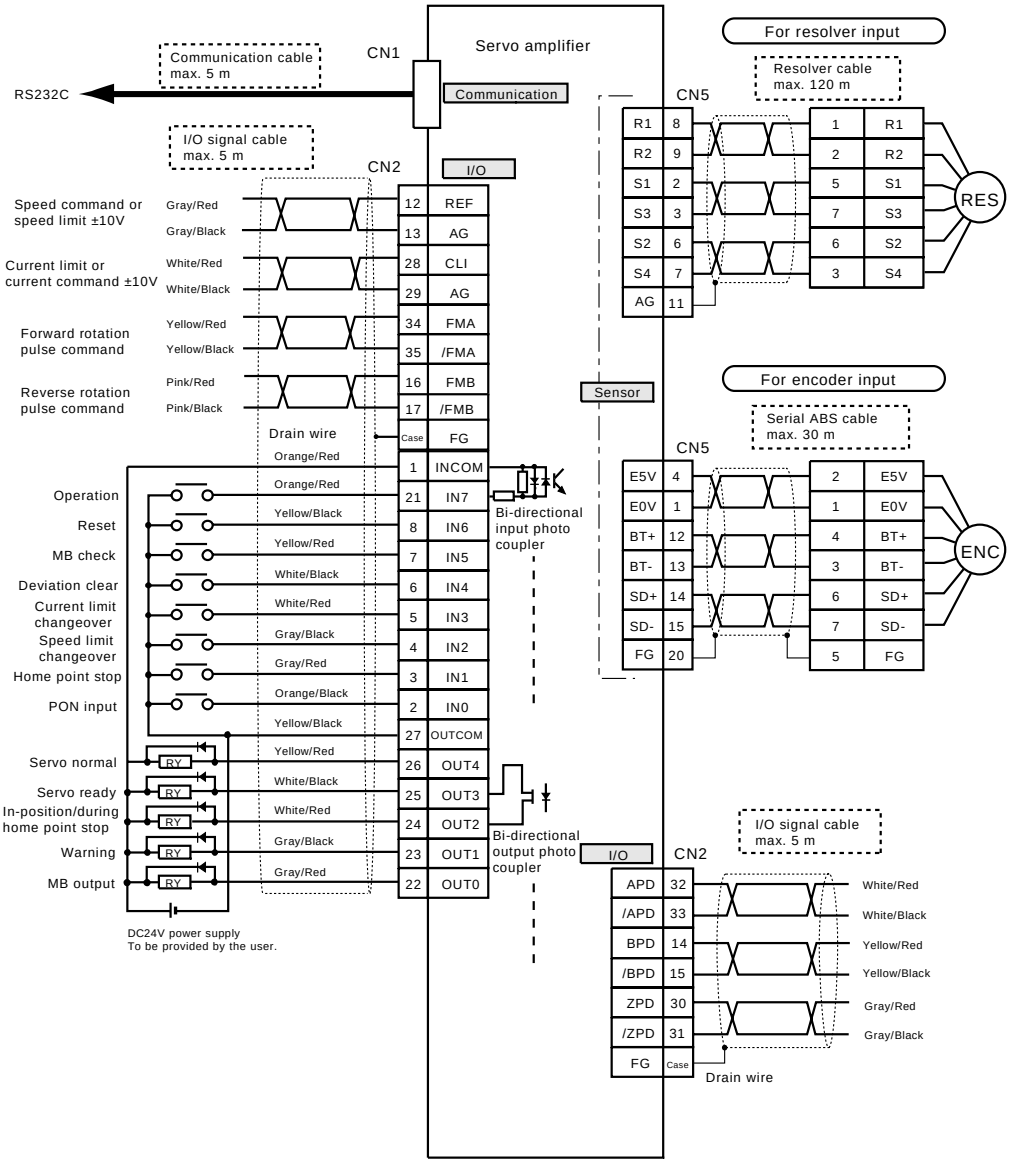

Connector code	Cable name	Cable type	Remarks
CN1	RS232C communication cable	CV01C + LAN cable	
CN2	I/O signal cable	CV02C–©©©A,B	
CN5	V Standard resolver cable	CV05G–©©©A,B,C,Z	Select either one.
	V ZA motor resolver cable	CV05H–©©©A,C	
	V Standard serial ABS cable	CV05D–©©©A,B,C,Z	
	V ZA motor serial ABS cable	CV05E—©©©A,C	

5.4.2 I/O Signal

Type	Name	Terminal No.	Function	Electric specification
Commu-nication CN1	RS232C		Connect when the RS232C interface and personal computer (SHANX) are used.	
Analog input CN2	Speed command or speed limit (REF)	12P (REF)/ 13P (AG)	In the speed control mode, this signal serves as a speed command. In the current control mode, it is used as a speed limit. For details, see the descriptions on the speed control mode and current control mode.	Vin: ±11.5 Vmax Input resistance 49 kΩ AD resolution: ±2048 (at ±11.5 V)
	Current command or current limit (CLI)	28P (CLI) 29P (AG)	In the speed control mode, this signal serves as a current limit. In the current control mode, it is used as a current command. For details, see the descriptions on the speed control mode and current control mode.	
Pulse input CN2	Position command (FMA), (/FMA), (FMB), (/FMB)	34P (FMA)/ 35P (/FMA)/ 16P (FMB)/ 17P (/FMB)	Inputs the forward rotation pulse (FMA, /FMA), reverse rotation pulse (FMB, /FMB) and pulse command. Specify the travel distance per pulse for UP04/UP05, and the pulse command type (phase AB, forward/reverse pulse, pulse and forward/reverse signal) and polarity for UP16. Specify the revolving direction for UP19 (position control polarity).	ON voltage: 3.5 V ~ 5.5 V OFF voltage: 2 V (max.) ON current: 16 mA (TYP) at 5 V
24 V input CN2	Operation (RUN)	21P (IN7)	Sets the motor ready to start. In the speed control and position control modes, the motor enters a servo lock state. In the current control mode, the command value torque takes effect immediately without servo lock. When this signal is turned off, the motor enters a servo free status. This signal also serves to turn on and off the brake output.	ON voltage: 19.2 V ~ 26.4 V OFF voltage: 3 V (max.) ON current: 6 mA (TYP) Min. ON/OFF width: 1 ms (at 24 V)
	Reset (RST)	8P (IN6)	Resets an alarm. (Kept ON for more than 30 ms.) When an overheat alarm (such as AL01, AL05, AL08, AL09 and AL17) has generated, it cannot be reset until the temperature drops to the specified level.	

<table>
<tr><th>Type</th><th>Name</th><th>Terminal No.</th><th>Function</th><th>Electric specification</th></tr>
<tr><td rowspan="6">24 V input
CN2</td><td>MB check (MBIN)</td><td>7P (IN5)</td><td>Enter the holding brake operation check signal (i.e., brake contactor auxiliary contact).
For the connecting method, see the descriptions on the power circuit.</td><td rowspan="6">ON voltage: 19.2 V ~ 26.4 V

OFF voltage: 3 V (max.)

ON current: 6 mA (TYP)

Min. ON/OFF width: 1 ms (at 24 V)</td></tr>
<tr><td>Deviation clear (ECLR)</td><td>6P (IN4)</td><td>Zero-clears the positional deviation counter with the ON edge.</td></tr>
<tr><td>Current control changeover (CCNT)</td><td>5P (IN3)</td><td rowspan="2">The control method can be changed over according to the signal combination.
<table>
<tr><th></th><th>Speed control</th><th>Current control</th><th>Position control</th><th>Position control</th></tr>
<tr><td>CCNT</td><td>OFF</td><td>ON</td><td>OFF</td><td>ON</td></tr>
<tr><td>PCNT</td><td>OFF</td><td>OFF</td><td>ON</td><td>ON</td></tr>
</table>
If the position control mode is selected during speed control operation, the control method is changed over with the stop detection signal after motor slowdown.</td></tr>
<tr><td>Position control changeover (PCNT)</td><td>4P (IN2)</td></tr>
<tr><td>Home point stop (ZSTP)</td><td>3P (IN1)</td><td>When this signal turns on during speed command operation, the motor stops at the next motor home point with the HOME (i.e., during home point stop) signal output.</td></tr>
<tr><td>Main circuit ON (PON)</td><td>2P (IN0)</td><td>This signal turns on the MC output and main circuit contactor. When the PN power source is fully charged, servo ready RDY turns on. When the RDY turns off, the main circuit contactor turns off mechanically. This signal should be integrated into the emergency stop circuit.</td></tr>
</table>

Type	Name	Terminal No.	Function	Electric specification
24 V output CN2	Servo normal (SST)	26P (OUT4)	This signal turns on about three (3) seconds after the AC power is turned on. If an alarm has occurred, this signal turns off, which turns on again with the reset (RST) input.	ON voltage: 1.5 V (max.) at 50 mA (max. current) OFF leak current: 1 µA (max)
	Servo ready (RDY)	25P (OUT3)	This signal turns on when the servo normal (SST) is ON, the main circuit ON (PON) is input and the PN power supply is turned on.	
	In-position/during home point stop (INP/HOME)	24P (OUT2)	The INP signal turns on when the positional deviation becomes less than the set value of UP07 (in-position width). The minimum ON time of the signal can be set by means of UP47 (in-position timer). The HOME signal turns on when the motor has stopped at the home point during home point stop operation (ZSTP). At this time, the servo must be locked.	
	Warning (WARN)	23P (OUT1)	This signal turns on when the battery voltage drops, the home point is not saved, an electronic thermal warning is output, a reverse-current absorption overheat warning is output, a fin overheat warning is output, or a pulse command warning is output. Once the factor causing a warning has been canceled, this signal turns off. You can continue the operation even while a warning is output.	
	MB output (MBO)	22P (OUT0)	Holding brake control output. For the operation sequence, see Section 2.	

Type	Name	Terminal No.	Function	Electric specification
Pulse output/ Differential output CN2	(APD) (/APD) (BPD) (/BPD) (ZPD) (/ZPD)	32P (APD), 33P (/APD), 14P (BPD), 15P (/BPD), 30P (ZPD), 31P (/ZPD)	This signal outputs the motor position, using phase AB pulse of 90° phase difference. Phase Z is the motor home point. When a resolver is used as the motor sensor, one (1) pulse is output per half a turn. When an encoder is used as the motor sensor, one (1) pulse is output per one (1) full turn. When the resolver is used as the motor sensor, the number of pulses per one (1) full turn of the motor can be figured out from the following expression. APD (BPD) = [24000] × [1/4] × [UP05/UP04] When the 17-bit encoder is used as the motor sensor, the number of pulses per one (1) full turn of the motor can be calculated from the following expression. APD (BPD) = [131072] × [1/4] × [UP05/UP04] The forward/reverse pulse can be selected by means of UP17. It is also possible to select the external display differential output or ABS output, using UP18.	Differential output equivalent to AM26LS31 Vout: 3 V (TYP), 2 V (MIN) at 20 mA output

- Features of speed, current and position control mode (mode 04)
  In this control mode, you can use the three (3) functions in each of the speed control mode (mode 01), current control mode (mode 02) and position control mode (mode 03) by selecting one of these modes with 24 V input signals PCNT and CCNT.
  When this happens, however, the usage of input and output signals differs from that in modes 01, 02 and 03. For details, see the input/output signal table.
  The table shows the relationship between the control mode and input signals. The position control mode has two (2) statuses, and you can switch the two (2) control modes by turning on or off the PCNT signal alone. Use this function when you wish to bypass the remaining one (1) mode.

Input signal / Control mode	Position control changeover (PCNT)	Current control changeover (CCNT)
Speed control	OFF	OFF
Current control	OFF	ON
Position control	ON	OFF
Position control	ON	ON

- Handling input and output signals
  Some input and output signals have different functions depending on the control modes. A certain setting effective in the speed control mode may not be effective in another control mode. For instance, the speed command (REF) in the speed control mode is taken as the speed limit in the current control mode. In such a case, externally switch the input/output signal settings sequentially. (Especially, take careful precautions on the speed command, current command, limit changeover, specified speed level, limit ON, etc.)
  In the position control mode (mode 03), if the forward rotation permit or reverse rotation permit input signal has turned off despite the pulse command input, the motor stops. This function is not available in the position control of this mode.
  When prohibiting forward or reverse rotation by means of the limit switch, use a method which need not give a command pulse from the controller in this control mode.

- Reference to other modes
  For adjustment of this mode, refer to the descriptions on each control mode (mode 01, 02 and 03) also.

CAUTION	If you change over the mode from the speed control to current control, the current command input value takes effect in lieu of the current limit input value. Shut down or minimize the command voltage, therefore, to avoid excessively large current command input.

CAUTION	If you change over the mode from the current control to speed control, the speed command input value takes effect in lieu of the speed limit input value. Shut down or minimize the command voltage, therefore, to avoid excessively large speed command input.

5.4.3 Operation

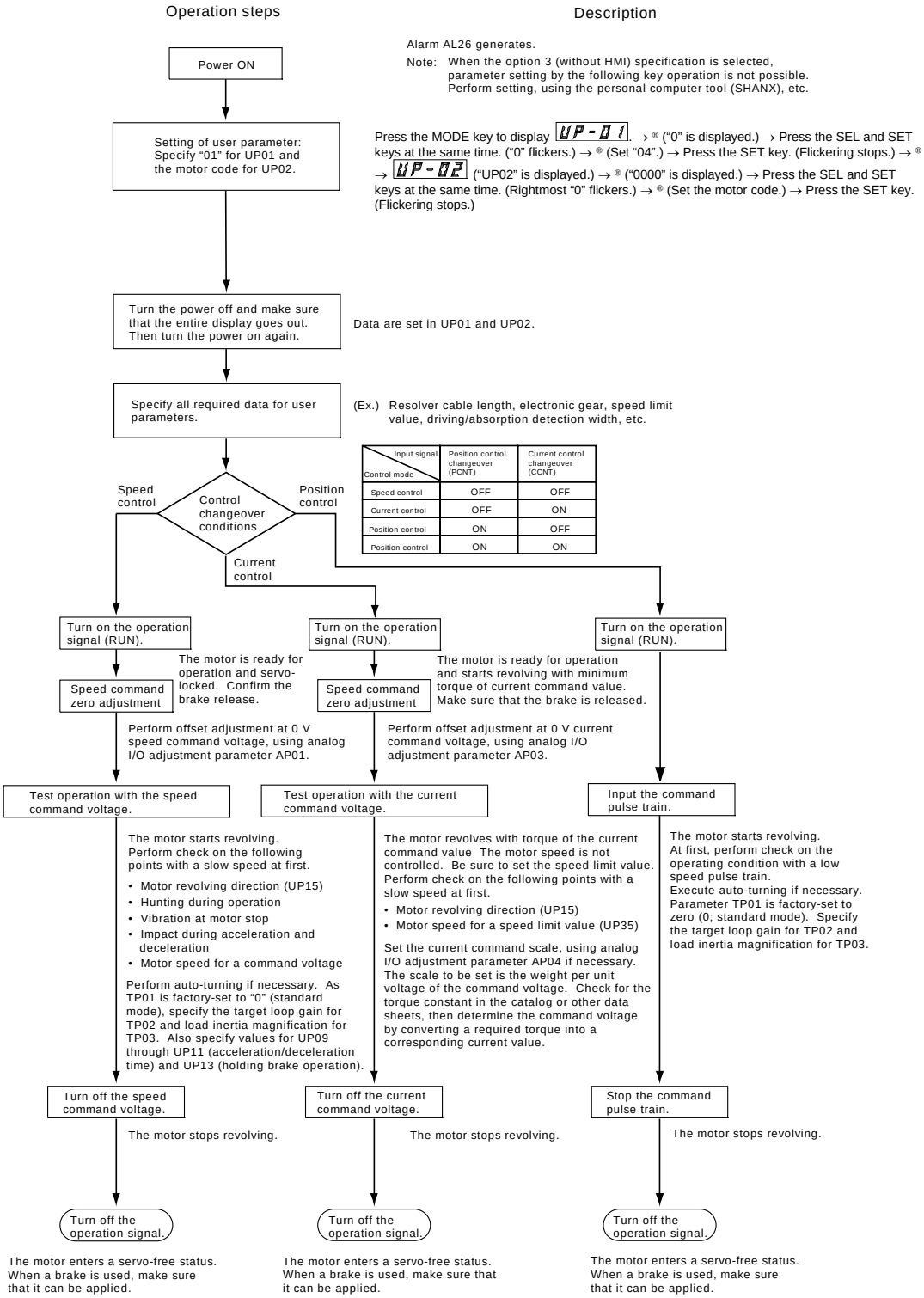

Control mode \ Input signal	Position control changeover (PCNT)	Current control changeover (CCNT)
Speed control	OFF	OFF
Current control	OFF	ON
Position control	ON	OFF
Position control	ON	ON

5.5 Direct Feed Mode Operation

5.5.1 Example Connections

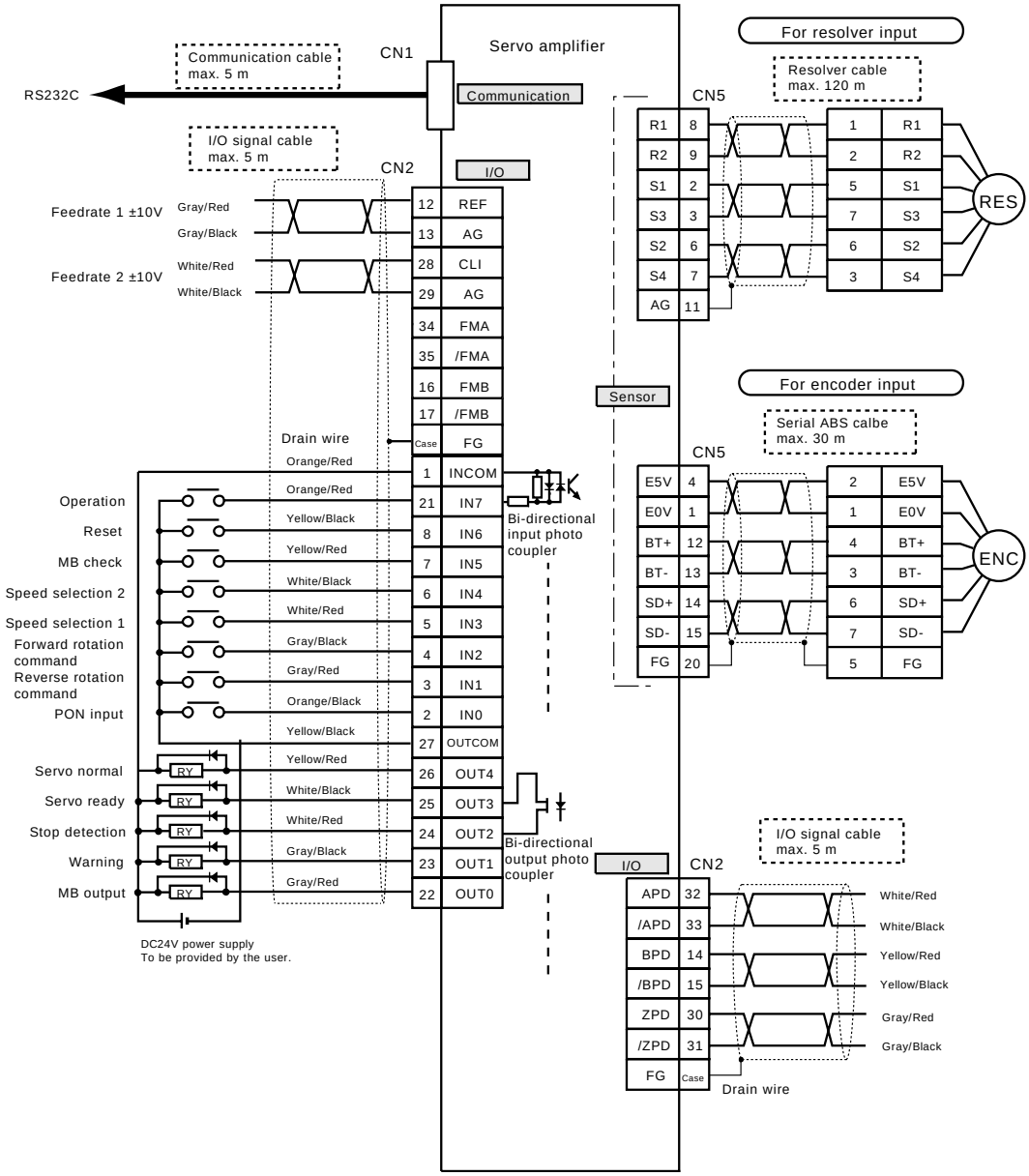

Connector code	Cable name	Cable type	Remarks
CN1	RS232C communication cable	CV01C + LAN cable	
CN2	I/O signal cable	CV02C–©©©A,B	
CN5	V Standard resolver cable	CV05G–©©©A,B,C,Z	Select either one.
	V ZA motor resolver cable	CV05H–©©©A,C	
	V Standard serial ABS cable	CV05D–©©©A,B,C,Z	
	V ZA motor serial ABS cable	CV05E—©©©A,C	

5.5.2 I/O Signal

Type	Name	Terminal No.	Function	Electric specification
Commu-nication CN1	RS232C		Connect when the RS232C interface and personal computer (SHANX) are used.	
Analog input CN2	Feedrate 1 (REF)	12P (REF)/ 13P (AG)	Feedrate 1 command voltage input by combination set of speed selection 1 and 2. Specify zero (0) for UP24 (feedrate 1). Specify the revolving direction for UP15. Set the acceleration/ deceleration time in UP09 to UP11. The input voltage can be monitored on the status display [cF---].	Vin: ±11.5 Vmax Input resistance 49 kΩ AD resolution: ±2048 (at ±11.5 V)
	Feedrate 2 (CLI)	28P (CLI) 29P (AG)	Feedrate 2 command voltage input by combination set of speed selection 1 and 2. Specify zero (0) for UP25 (feedrate 2). Specify the revolving direction for UP15. Set the acceleration/ deceleration time in UP09 to UP11. The input voltage can be monitored on the status display [cc---].	
24 V input CN2	Operation (RUN)	21P (IN7)	Sets the motor ready to start (i.e., servo lock). When this signal is turned off, the motor enters a servo free status. This signal also serves to turn on and off the brake output.	ON voltage: 19.2 V ~ 26.4 V OFF voltage: 3 V (max.) ON current: 6 mA (TYP) Min. ON/OFF width: 1 ms (at 24 V)
	Reset (RST)	8P (IN6)	Resets an alarm. (Kept ON for more than 30 ms.) When an overheat alarm (such as AL01, AL05, AL08, AL09 and AL17) has generated, it cannot be reset until the temperature drops to the specified level.	
	MB check (MBIN)	7P (IN5)	Enter the holding brake operation check signal (i.e., brake contactor auxiliary contact). For the connecting method, see the descriptions on the power circuit.	

<table>
<tr><th>Type</th><th>Name</th><th>Terminal No.</th><th>Function</th><th>Electric specification</th></tr>
<tr><td rowspan="4">24 V input CN2</td><td>Speed selection 2 (SEL2)</td><td>6P (IN4)</td><td rowspan="2">Selects feedrate 1 to feedrate 4 according to the following combinations.
<table>
<tr><th></th><th>Feedrate 1</th><th>Feedrate 2</th><th>Feedrate 3</th><th>Feedrate 4</th></tr>
<tr><td>Speed selection 1</td><td>OFF</td><td>ON</td><td>OFF</td><td>ON</td></tr>
<tr><td>Speed selection 2</td><td>OFF</td><td>OFF</td><td>ON</td><td>ON</td></tr>
</table></td><td rowspan="4">ON voltage: 19.2 V ~ 26.4 V
OFF voltage: 3 V (max.)
ON current: 6 mA (TYP)
Min. ON/OFF width: 1 ms (at 24 V)</td></tr>
<tr><td>Speed selection 1 (SEL1)</td><td>5P (IN3)</td></tr>
<tr><td>Forward rotation command (FCMD)</td><td>4P (IN2)</td><td>While RUN is ON, turn on this signal and the motor rotates forward. If you turn off the signal, the motor is servo-locked when the speed falls below the stop detection level.</td></tr>
<tr><td>Reverse rotation command (RCMD)</td><td>3P (IN1)</td><td>While RUN is ON, turn on this signal and the motor rotates reverse. If you turn off the signal, the motor is servo-locked when the speed falls below the stop detection level.</td></tr>
<tr><td></td><td>Main circuit ON (PON)</td><td>2P (IN0)</td><td>This signal turns on the MC output and main circuit contactor. When the PN power source is fully charged, servo ready RDY turns on. When the RDY turns off, the main circuit contactor turns off mechanically. This signal should be integrated into the emergency stop circuit.</td><td></td></tr>
<tr><td rowspan="2">24 V output CN2</td><td>Servo normal (SST)</td><td>26P (OUT4)</td><td>This signal turns on about three (3) seconds after the AC power is turned on. If an alarm has occurred, this signal turns off, which turns on again with the reset (RST) input.</td><td rowspan="2">ON voltage: 1.5 V (max.) at 50 mA (max. current)
OFF leak current: 1 µA (max)</td></tr>
<tr><td>Servo ready (RDY)</td><td>25P (OUT3)</td><td>This signal turns on when the servo normal (SST) is ON, the main circuit ON (PON) is input and the PN power supply is turned on.</td></tr>
</table>

Type	Name	Terminal No.	Function	Electric specification
24 V output CN2	Stop detection (STA)	24P (OUT2)	This signal turns on when the motor speed is less than the UP28 set value.	ON voltage: 1.5 V (max.) at 50 mA (max. current) OFF leak current: 1 µA (max)
	Warning (WARN)	23P (OUT1)	This signal turns on when the battery voltage drops, the home point is not saved, an electronic thermal warning is output, a reverse-current absorption overheat warning is output, a fin overheat warning is output, or a pulse command warning is output. Once the factor causing a warning has been canceled, this signal turns off. You can continue the operation even while a warning is output.	
	MB output (MBO)	22P (OUT0)	Holding brake control output. For the operation sequence, see Section 2.	
Pulse output/ Differential output CN2	(APD) (/APD) (BPD) (/BPD) (ZPD) (/ZPD)	32P (APD), 33P (/APD), 14P (BPD), 15P (/BPD), 30P (ZPD), 31P (/ZPD)	This signal outputs the motor position, using phase AB pulse of 90° phase difference. Phase Z is the motor home point. When a resolver is used as the motor sensor, one (1) pulse is output per half a turn. When an encoder is used as the motor sensor, one (1) pulse is output per one (1) full turn. When the resolver is used as the motor sensor, the number of pulses per one (1) full turn of the motor can be figured out from the following expression. APD (BPD) = [24000] × [1/4] × [UP05/UP04] When the 17-bit encoder is used as the motor sensor, the number of pulses per one (1) full turn of the motor can be calculated from the following expression.	Differential output equivalent to AM26LS31 Vout: 3 V (TYP), 2 V (MIN) at 20 mA output

Type	Name	Terminal No.	Function	Electric specification
Pulse output/ Differential output CN2	(APD) (/APD) (BPD) (/BPD) (ZPD) (/ZPD)	32P (APD), 33P (/APD), 14P (BPD), 15P (/BPD), 30P (ZPD), 31P (/ZPD)	APD (BPD) = [131072] × [1/4] × [UP05/UP04] The forward/reverse pulse can be selected by means of UP17. It is also possible to select the external display differential output or ABS output, using UP18.	Differential output equivalent to AM26LS31 Vout: 3 V (TYP), 2 V (MIN) at 20 mA output

- Specified speed level and stop detection

  When the motor speed has reached the level of feedrate 1 to feedrate 4, the stop detection turns on.

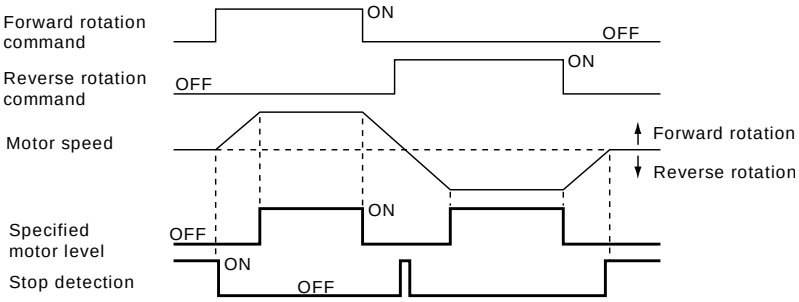

- Changeover of feedrate 1 to feedrate 4 in direct feed mode

  The four (4) types of feedrate can be changed over by means of signal combinations tabled below.

Input signal / Speed selection	Speed selection 1 (SEL1)	Speed selection 2 (SEL2)
Feedrate 1	OFF	OFF
Feedrate 2	ON	OFF
Feedrate 3	OFF	ON
Feedrate 4	ON	ON

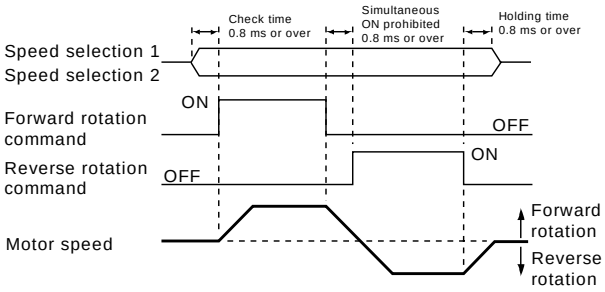

* Speed selection 1 and 2 can be changed even during motor rotation.

* While both the forward rotation and reverse rotation commands are turned on, the motor will not rotate.

- Direct feed operation

  The direct feed operation is used to change the speed by means of external signals. This method is often adopted by transfer machines. Boring rapid traverse rate, cutting feedrate and maximum thrust by current limit are possible.

  The feedrate can be specified in four (4) steps. The 1st and 2nd feeds can be specified by means of analog inputs (REF, CLI) or using parameters (UP24, UP25). The 3rd and 4th feeds can be specified, using parameters UP26 and UP27.

  The current limit changeover method is selected by means of UP34, and the limit value is set, using UP08, UP36 to UP39.

  Compared with the analog input speed setting, the parameter speed setting will not cause speed fluctuation because the speed set value is unaffected by the ambient temperature.

  The figure right shows the boring process of a transfer machine, where the axis is fed at rapid traverse in the 1st feed step followed by at deceleration in the 2nd feed and 3rd feed steps, and at cutting feedrate in the 4th feed step. Then the 1st feed is selected by the speed selection and the reverse rotation command is turned on for quick return.

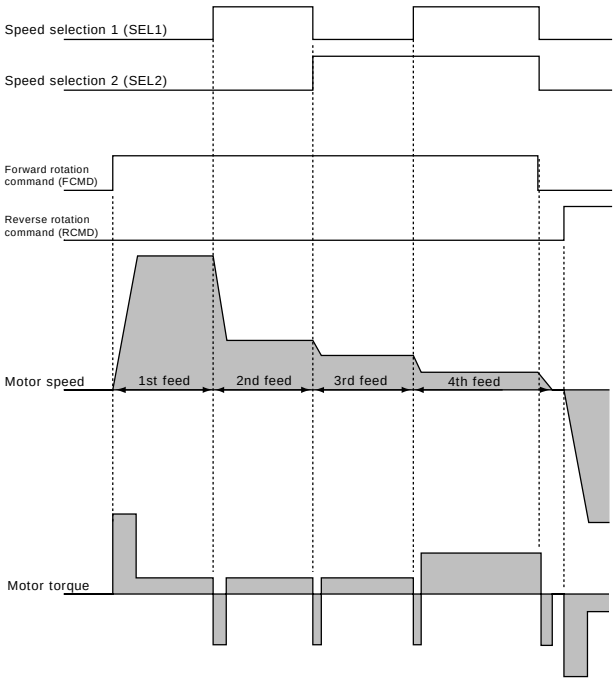

- Acceleration/deceleration functions

  Soft start:

  A speed command for quick speed change causes sudden acceleration or deceleration of a motor, which can be leveled by setting the soft start time. Specify the acceleration/deceleration time for UP09 and UP10. If a value other than zero (0) is specified for UP11 (S-type acceleration/deceleration), this parameter value is ignored.

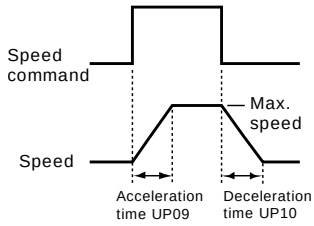

  S-type acceleration/deceleration:

  Smoother acceleration/deceleration than the soft start is obtained. Specify the same time constant for both acceleration and deceleration. The time required to reach the target speed is 1.1 times the set value. Use UP11 for this purpose.

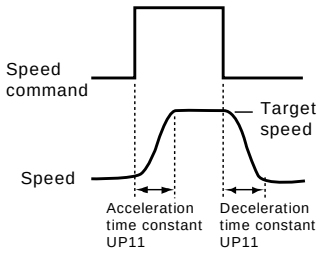

- External command for feedate 1 and feedrate 2

  When zero (0) is specified or UP24 and UP25 with the external command selected for the feedrate, the following adjustment is required.

  Zero adjustment (AP01) and scale adjustment (AP02) of feedrate 1:

  Where the motor speed is VR and the speed command voltage is REF, the following expression can be established.

  $$VR = AP02 \times (REF + AP01)$$

  Though zero (0) adjustment is factory-done, if the command itself has an offset, the motor may rotate a little. When this happens, perform automatic zero (0) adjustment, considering the command offset.

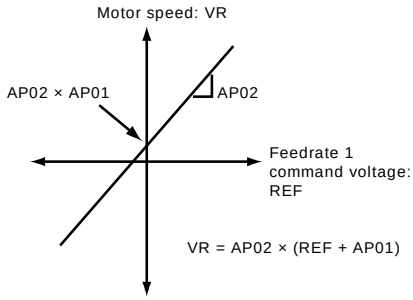

The scale is adjusted to 1,500 min^{-1}/10 V, using AP02. If the speed command is 3,000 min^{-1} at 10 V, specify “300.0” for AP02.

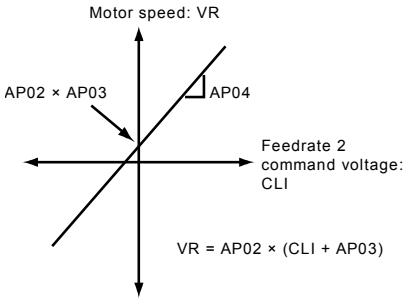

Zero adjustment (AP03) and scale adjustment (AP02) of feedrate 2:
Perform zero (0) adjustment and scale adjustment by means of AP03 and AP02.

5.5.3 Operation

Operation steps	Description
Power ON	Alarm 26 generates. Note: When the option 3 (without HMI) specification is selected, parameter setting by the following key operation is not possible. Perform setting, using the personal computer tool (SHANX), etc.
↓	
Setting of user parameter: Specify “05” for UP01 and the motor code for UP02.	Press the MODE key to display UP-01. → ® (“0” is displayed.) → Press the SEL and SET keys at the same time. (“0” flickers.) → ® (Set “05”.) → Press the SET key. (Flickering stops.) → ® → UP-02 (“UP02” is displayed.) → ® (“0000” is displayed.) → Press the SEL and SET keys at the same time. (Rightmost “0” flickers.) → ® (Set the motor code.) → Press the SET key. (Flickering stops.)
↓	
Turn the power off and make sure that the entire display goes out. Then turn the power on again.	Data are set in UP01 and UP02.
↓	
Specify all required data for user parameters.	(Ex.) Resolver cable length for UP03, electronic gear for UP04 and UP05, current limit for UP08 and UP34, feedrate 1 to feedrate 4 for UP 24 to UP27, etc.
↓	
Turn on the operation signal.	The motor is ready for an operation and servo-locked. When using a brake, make sure that it is open.
↓	
Zero adjustment of feedrate 1 and feedrate 2 command voltage.	Perform offset adjustment at 0 V command voltage, using adjustment parameter AP01 for feedrate 1 and AP03 for feedrate 2.
↓	
Turn on speed selection 1 and 2. Turn on the forward rotation command and reverse rotation command.	The motor starts revolving. Perform check on the operating condition with a slow speed at first. • Motor revolving direction (UP15) • Hunting during operation • Vibration at motor stop • Impact during acceleration and deceleration • Motor speed for a command speed Perform auto-turning if necessary. As TP01 is factory-set to “0” (standard mode), specify the target loop gain for TP02 and load inertia magnification for TP03. Also specify the acceleration/deceleration time for UP09 through UP11 and the holding brake operation for UP13.

↓

Turn off the forward rotation command or reverse rotation command.	The motor stops revolving. Note: The motor also stops when both forward and reverse rotation commands are turned on at the same time.

↓

Turn off the operation signal.	The motor enters a servo-free status. When a brake is used, make sure that it can be applied.

5.6 Draw Control Mode Operation

5.6.1 Example Connections

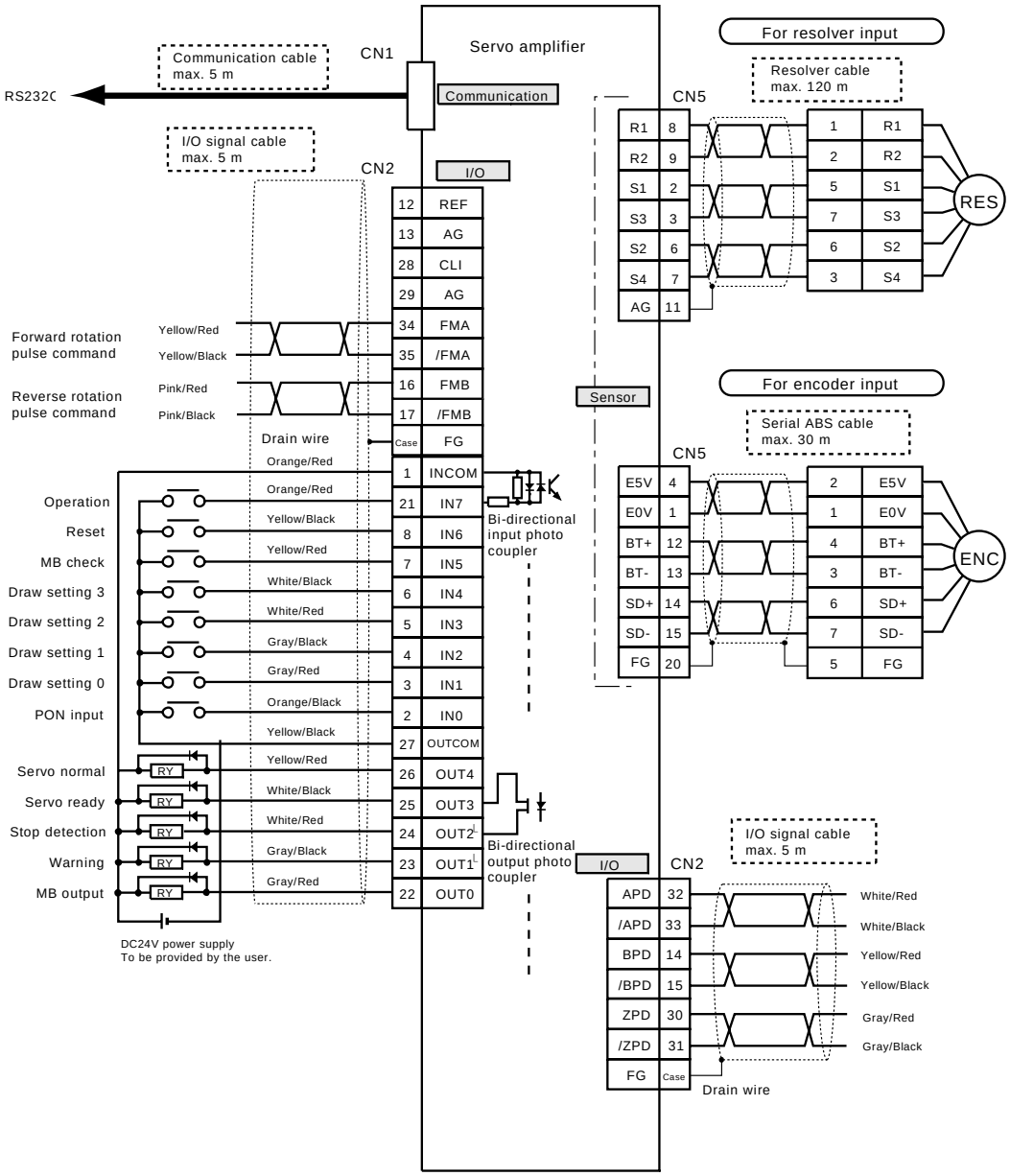

Connector code	Cable name	Cable type	Remarks
CN1	RS232C communication cable	CV01C + LAN cable	
CN2	I/O signal cable	CV02C–©©©A,B	
CN5	V Standard resolver cable	CV05G–©©©A,B,C,Z	Select either one.
	V ZA motor resolver cable	CV05H–©©©A,C	
	V Standard serial ABS cable	CV05D–©©©A,B,C,Z	
	V ZA motor serial ABS cable	CV05E—©©©A,C	

5.6.2 I/O Signal

Type	Name	Terminal No.	Function	Electric specification
Commu-nication CN1	RS232C		Connect when the RS232C interface and personal computer (SHANX) are used.	
Analog input CN2	–		Not used	
Pulse input CN2	Position command (FMA), (/FMA), (FMB), (/FMB)	34P (FMA)/ 35P (/FMA)/ 16P (FMB)/ 17P (/FMB)	Inputs the forward rotation pulse (FMA, /FMA), reverse rotation pulse (FMB, /FMB) and pulse command. Specify the travel distance per pulse for UP04/UP05, and the pulse command type (phase AB, forward/reverse pulse, pulse and forward/reverse signal) and polarity for UP16. Specify the revolving direction for UP19 (position control polarity).	ON voltage: 3.5 V ~ 5.5 V OFF voltage: 2 V (max.) ON current: 16 mA (TYP) at 5 V
24 V input CN2	Operation (RUN)	21P (IN7)	Sets the motor ready to start (servo lock). When this signal is turned off, the motor enters a servo free status. This signal also serves to turn on and off the brake output.	ON voltage: 19.2 V ~ 26.4 V OFF voltage: 3 V (max.) ON current: 6 mA (TYP) Min. ON/OFF width: 1 ms (at 24 V)
	Reset (RST)	8P (IN6)	Resets an alarm. (Kept ON for more than 30 ms.) When an overheat alarm (such as AL01, AL05, AL08, AL09 and AL17) has generated, it cannot be reset until the temperature drops to the specified level.	
	MB check (MBIN)	7P (IN5)	Enter the holding brake operation check signal (i.e., brake contactor auxiliary contact). For the connecting method, see the descriptions on the power circuit.	

<table>
<tr><th>Type</th><th>Name</th><th>Terminal No.</th><th>Function</th><th>Electric specification</th></tr>
<tr><td rowspan="4">24 V input CN2</td><td>Draw setting 3 (DRAW3)</td><td>6P (IN4)</td><td rowspan="4">Indicates the increase/decrease ratio against the command pulse. Use draw magnification parameter UP20 to specify 10 times or 100 times. Also, you can use parameter UP64 to set a draw value as a fixed value.</td><td rowspan="5">ON voltage: 19.2 V ~ 26.4 V

OFF voltage: 3 V (max.)

ON current: 6 mA (TYP)

Min. ON/OFF width: 1 ms (at 24 V)</td></tr>
<tr><td>Draw setting 2 (DRAW2)</td><td>5P (IN3)</td></tr>
<tr><td>Draw setting 1 (DRAW1)</td><td>4P (IN2)</td></tr>
<tr><td>Draw setting 0 (DRAW0)</td><td>3P (IN1)</td><td>
<table>
<tr><th>Draw 3</th><th>Draw 2</th><th>Draw 1</th><th>Draw 0</th><th>Draw Value</th></tr>
<tr><td>0</td><td>1</td><td>1</td><td>1</td><td>7</td></tr>
<tr><td>0</td><td>1</td><td>1</td><td>0</td><td>6</td></tr>
<tr><td>0</td><td>1</td><td>0</td><td>1</td><td>5</td></tr>
<tr><td>0</td><td>1</td><td>0</td><td>0</td><td>4</td></tr>
<tr><td>0</td><td>0</td><td>1</td><td>1</td><td>3</td></tr>
<tr><td>0</td><td>0</td><td>1</td><td>0</td><td>2</td></tr>
<tr><td>0</td><td>0</td><td>0</td><td>1</td><td>1</td></tr>
<tr><td>0</td><td>0</td><td>0</td><td>0</td><td>0</td></tr>
<tr><td>1</td><td>1</td><td>1</td><td>1</td><td>–1</td></tr>
<tr><td>1</td><td>1</td><td>1</td><td>0</td><td>–2</td></tr>
<tr><td>1</td><td>1</td><td>0</td><td>1</td><td>–3</td></tr>
<tr><td>1</td><td>1</td><td>0</td><td>0</td><td>–4</td></tr>
<tr><td>1</td><td>0</td><td>1</td><td>1</td><td>–5</td></tr>
<tr><td>1</td><td>0</td><td>1</td><td>0</td><td>–6</td></tr>
<tr><td>1</td><td>0</td><td>0</td><td>1</td><td>–7</td></tr>
<tr><td>1</td><td>0</td><td>0</td><td>0</td><td>-8</td></tr>
</table>
* “1” and “0” in the table signify ON and OFF, respectively.
</td></tr>
<tr><td>Main circuit ON (PON)</td><td>2P (IN0)</td><td>This signal turns on the MC output and main circuit contactor. When the PN power source is fully charged, servo ready RDY turns on. When the RDY turns off, the main circuit contactor turns off mechanically. This signal should be integrated into the emergency stop circuit.</td></tr>
<tr><td rowspan="3">24 V output CN2</td><td>Servo normal (SST)</td><td>26P (OUT4)</td><td>This signal turns on about three (3) seconds after the AC power is turned on. If an alarm has occurred, this signal turns off, which turns on again with the reset (RST) input.</td><td rowspan="3">ON voltage: 1.5 V (max.) at 50 mA (max. current)

OFF leak current: 1 µA (max)</td></tr>
<tr><td>Servo ready (RDY)</td><td>25P (OUT3)</td><td>This signal turns on when the servo normal (SST) is ON, the main circuit ON (PON) is input and the PN power supply is turned on.</td></tr>
<tr><td>Stop detection (STA)</td><td>24P (OUT2)</td><td>This signal turns on when the motor speed drops to less than the set value of UP28 (stop detection speed).</td></tr>
</table>

Type	Name	Terminal No.	Function	Electric specification
24 V output CN2	Warning (WARN)	23P (OUT1)	This signal turns on when the battery voltage drops, the home point is not saved, an electronic thermal warning is output, a reverse-current absorption overheat warning is output, a fin overheat warning is output, or a pulse command warning is output. Once the factor causing a warning has been canceled, this signal turns off. You can continue the operation even while a warning is output.	ON voltage: 1.5 V (max.) at 50 mA (max. current) OFF leak current: 1 µA (max)
	MB output (MBO)	22P (OUT0)	Holding brake control output. For the operation sequence, see Section 2.	
Pulse output/ Differential output CN2	(APD) (/APD) (BPD) (/BPD) (ZPD) (/ZPD)	32P (APD), 33P (/APD), 14P (BPD), 15P (/BPD), 30P (ZPD), 31P (/ZPD)	This signal outputs the motor position, using phase AB pulse of 90° phase difference. Phase Z is the motor home point. When a resolver is used as the motor sensor, one (1) pulse is output per half a turn. When an encoder is used as the motor sensor, one (1) pulse is output per one (1) full turn. When the resolver is used as the motor sensor, the number of pulses per one (1) full turn of the motor can be figured out from the following expression. APD (BPD) = [24000] × [1/4] × [UP05/UP04] When the 17-bit encoder is used as the motor sensor, the number of pulses per one (1) full turn of the motor can be calculated from the following expression. APD (BPD) = [131072] × [1/4] × [UP05/UP04] The forward/reverse pulse can be selected by means of UP17. It is also possible to select the external display differential output or ABS output, using UP18. When “5” is specified for the digit of 1 of UP18, the pulse output multiplied by the draw ratio (i.e., draw pulse) can be obtained.	Differential output equivalent to AM26LS31 Vout: 3 V (TYP), 2 V (MIN) at 20 mA output

- Draw ratio

  The draw ratio can be figured out by using the input signal draw setting and user parameter draw magnification (UP20), as shown below.

  Internal pulse

  $$= [\text{Command pulse}] \times \frac{UP04}{UP05} \times [1 \pm \text{Draw setting} \times \text{Draw magnification}]$$

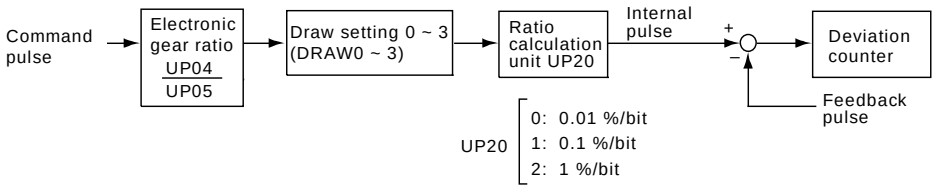

* Draw setting is possible not only with the sequence input but using parameter UP64.

M1 is the main motor used for line speed control and tension cut, which is operated in the speed control mode. M2 and M3 are the draw control systems for the preceding steps. Set the electronic gear (UP04, UP05) in such a manner that the roller peripheral speed can be equivalent to the line speed. Specify the draw ratio, using input signal draw setting 0 to 3 and UP20. In this example, M2 speed is increased by 2 % compared with M1 speed, and M3 speed is increased by 6 % compared with M2 speed.

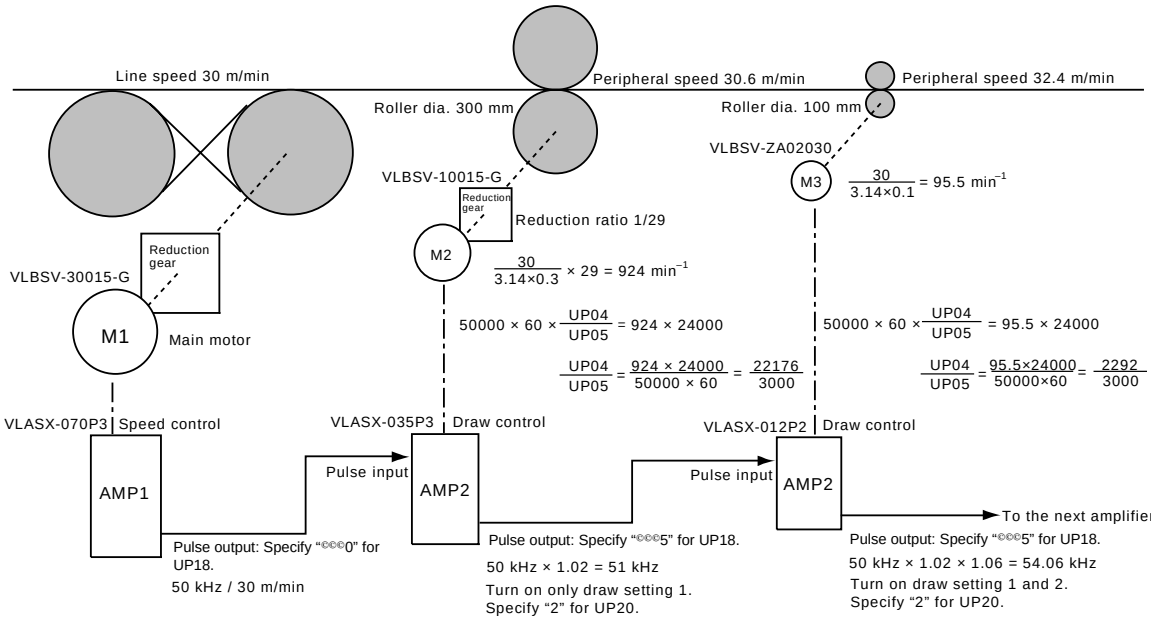

- Specified speed level and stop detection
  When the motor speed has reached the target speed of the pulse command, the specified speed level signal turns on.
  When the motor has stopped after the pulse command was interrupted, the stop detection signal turns on.

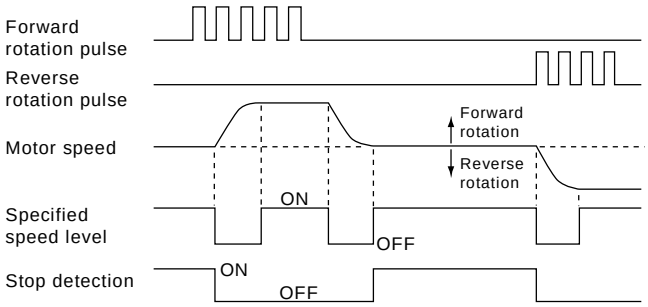

- Current limit
  When "©2©" is specified for UP34 (current limit changeover method), the current limit is effected with the set value of UP08 (current limit value).
  The factory-set value of UP08 is 100 %.

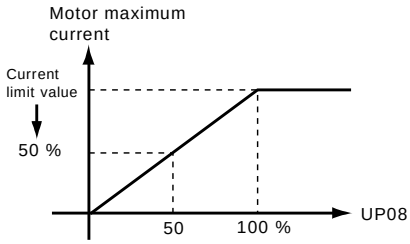

5.6.3 Operation

Operation steps	Description
Power ON	Alarm 26 generates. Note: When the option 3 (without HMI) specification is selected, parameter setting by the following key operation is not possible. Perform setting, using the personal computer tool (SHANX), etc.
↓	
Setting of user parameter: Specify “06” for UP01 and the motor code for UP02.	Press the MODE key to display UP-01. → ® (“0” is displayed.) → Press the SEL and SET keys at the same time. (“0” flickers.) → ® (Set “06”.) → Press the SET key. (Flickering stops.) → ® → UP-02 (“UP02” is displayed.) → ® (“0000” is displayed.) → Press the SEL and SET keys at the same time. (Rightmost “0” flickers.) → ® (Set the motor code.) → Press the SET key. (Flickering stops.)
↓	
Turn the power off and make sure that the entire display goes out. Then turn the power on again.	Data are set in UP01 and UP02.
↓	
Specify all required data for user parameters.	(Ex.) Resolver cable length for UP03, electronic gear for UP04 and UP05, current limit for UP08 and UP34, pulse command for UP16, output type for UP17, differential output type for UP18, etc.
↓	
Turn on the operation signal.	The motor is ready for an operation and servo-locked. When using a brake, make sure that it is open.
↓	
Enter the command pulse train. Turn on draw setting 0 to 3.	The motor starts revolving. Perform check on the operating condition with a slow speed at first. • Motor revolving direction (UP15) • Hunting during operation • Vibration at motor stop Perform auto-turning if necessary. As TP01 is factory-set to “0” (standard mode), specify the target loop gain for TP02 and load inertia magnification for TP03.
↓	
Stop the command pulse train.	The motor stops revolving.
↓	
Turn off the operation signal.	The motor enters a servo-free status. When a brake is used, make sure that it can be applied.

5.7 VLBus–V Mode Operation

This is the operation mode exclusively used for the hardware structure where the type of the servo amplifier is VLASX–©©©P©–©V© (VLBus–V communication specification). (User parameter UP01 = 31)

5.7.1 Example Connections

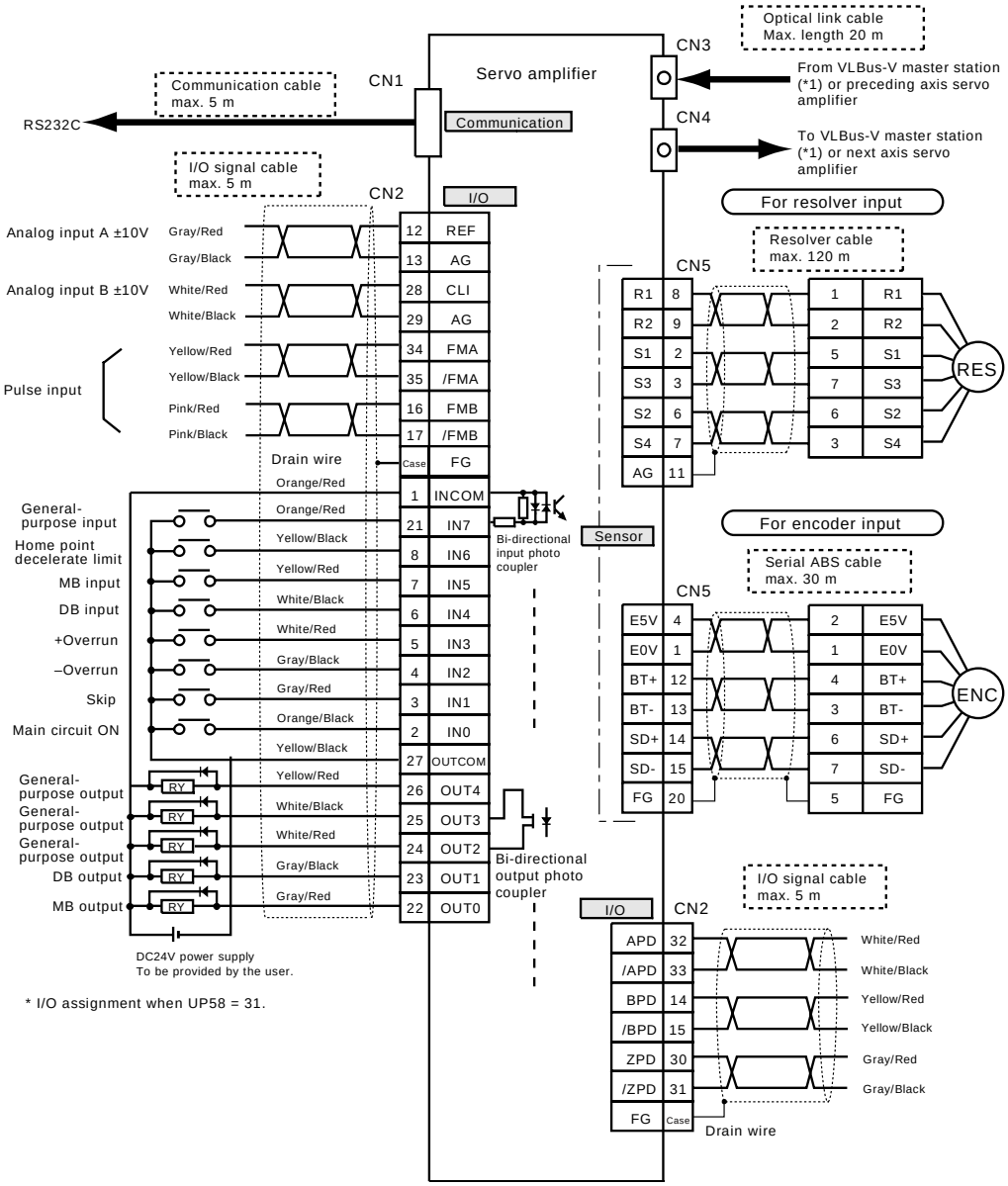

(*1) VLBus–V master station: NVBOY–200/3200, etc.

Connector code	Cable name	Cable type	Remarks
CN1	RS232C communication cable	CV01C + LAN cable	
CN2	I/O signal cable	CV02C–©©©A,B	
CN5	V Standard resolver cable	CV05G–©©©A,B,C,Z	Select either one.
	V ZA motor resolver cable	CV05H–©©©A,C	
	V Standard serial ABS cable	CV05D–©©©A,B,C,Z	
	V ZA motor serial ABS cable	CV05E—©©©A,C	

5.7.2 I/O Signal

Type	Name	Terminal No.	Function	Electric specification
Commu-nication CN1	RS232C		Connect when the RS232C interface and personal computer (SHANX) are used.	
Analog input CN2	Input A	12P (REF) 13P (AG)	Input the analog voltage to NCIF register Q*©©SAA.	Input resistance 49 kΩ Vin ±11.5 Vmax
	Input B	28P (CLI)/ 29P (AG)	Input the analog voltage to NCIF register Q*©©SAB.	
Pulse input CN2	Pulse input A	34P (FMA)/ 35P (/FMA)/	Specify the pulse command type (phase AB, forward/reverse pulse, pulse and forward/reverse signal) and polarity for UP16. This signal is input to NCIF register SP©© (pulse input counter). Max. input frequency 500 kpps (forward/reverse pulse), 125 kpps (phase AB pulse)	ON voltage: 3.5 V ~ 5.5 V OFF voltage: 2 V or less ON current: 16 mA (TYP) at 5 V
	Pulse input B	16P (FMB)/ 17P (/FMB)		
24 V input CN2	General-purpose input	CN2 21P (IN7)	This signal can be used as a general-purpose input. (* See the assignment table.)	ON voltage: 19.2 V ~ 26.4 V OFF voltage: 3 V or less ON current: 6 mA (TYP) at 24 V Min. ON/OFF width: 2.0 ms (at 24 V) * Note: The input descriptions are made, assuming UP58 = 31.
	Home point decelerate limit (Q*©©HLLS)	8P (IN6)	Connect the home point decelerate limit signal for home point setting operation. The positive and negative logics can be reversed by means of amplifier parameter UP59. When this signal is set to the general-purpose input by means of UP58, NCIF register Q*©©HLLS has the same function.	
	MB input (MBI)	7P (IN5)	Enter the holding brake operation check signal (i.e., brake contactor auxiliary contact). For the connecting method, see the descriptions on the power circuit. The NCIF register does not have this function.	

Type	Name	Terminal No.	Function	Electric specification
24 V input CN2	DB input (DBI)	6P (IN4)	Enter the dynamic brake operation check signal (i.e., brake contactor auxiliary contact). For the connecting method, see the descriptions on the power circuit. The NCIF register does not have this function.	ON voltage: 19.2 V ~ 26.4 V OFF voltage: 3 V or less ON current: 6 mA (TYP) at 24 V Min. ON/OFF width: 2.0 ms (at 24 V) Note: The input descriptions are made, assuming UP58 = 31.
	+Overrun (Q*©©LOTP)	5P (IN3)	Connect the overrun detection signal on the plus (+) side. The positive and negative logics can be reversed by amplifier parameter UP59. The NCIF register does not have this function.	
	–Overrun (Q*©©LOTM)	4P (IN2)	Connect the overrun detection signal on the minus (–) side. The positive and negative logics can be reversed by amplifier parameter UP59. The NCIF register does not have this function.	
	Skip (Q*©©SKIP1)	3P (IN1)	Skip input for G31, CAME and CAMF commands. Specify the skip signal detection condition by means of NC parameter NP110. When two (2) or more skip inputs are required, change the UP58 setting. When this signal is set to the general-purpose input by means of UP58, the NCIF register Q*©©SKIP© has the same function.	
	Main circuit ON (PON)	2P (IN0)	This signal turns on the MC output and main circuit contactor. When the PN power source is fully charged, servo ready RDY turns on. When the RDY turns off, the main circuit contactor turns off mechanically. This signal should be integrated into the emergency stop circuit.	

Type	Name	Terminal No.	Function	Electric specification
24 V output CN2	General-purpose output	CN2 26P (OUT4)	This signal can be used as a general-purpose output. (* See the assignment table.)	ON voltage: 1.5 V or less at 50 mA (max. current) OFF leak current: 1 µA or lsss Note: The input descriptions are made, assuming UP58 = 31.
	General-purpose output	25P (OUT3)		
	General-purpose output	24P (OUT2)		
	DB output (DBO)	23P (OUT1)	Dynamic brake control output. For the operation sequence, see Section 2. The NCIF register does not have the same function.	
	MB output (MBO)	22P (OUT0)	Holding brake control output. For the operation sequence, see Section 2. The NCIF register does not have the same function.	
Pulse output/ Differential output CN2	(APD) (/APD) (BPD) (/BPD) (ZPD) (/ZPD)	32P (APD), 33P (/APD), 14P (BPD), 15P (/BPD), 30P (ZPD), 31P (/ZPD)	The default output data is the present value phase AB pulse output. Select the output type by means of UP17 and UP18. When UP18 = ©©©6, the value of NCIF register Q*©©POUTR is output in pulses.	Differential output equivalent to AM26LS31 Vout: 3 V (TYP), 2 V (MIN) at 20 mA output

5.7.3 Amplifier I/O Assignment Table

The I/O addresses of the 32-axis control servo amplifier used for general-purpose I/O is assigned as shown in the table below.
IN0 is predetermined to PON (main circuit power supply ON). This can be used as a monitor from the VLBus–V master station (NCBOY–200/3200, etc.).

	Axis 0	Axis 1	Axis 2	Axis 3	Axis 4	Axis 5	Axis 6	Axis 7
IN0	I900	I908	I910	I918	I920	I928	I930	I938
IN1	I901	I909	I911	I919	I921	I929	I931	I939
IN2	I902	I90A	I912	I91A	I922	I92A	I932	I93A
IN3	I903	I90B	I913	I91B	I923	I92B	I933	I93B
IN4	I904	I90C	I914	I91C	I924	I92C	I934	I93C
IN5	I905	I90D	I915	I91D	I925	I92D	I935	I93D
IN6	I906	I90E	I916	I91E	I926	I92E	I936	I93E
IN7	I907	I90F	I917	I91F	I927	I92F	I937	I93F
OUT0	O900	O908	O910	O918	O920	O928	O930	O938
OUT1	O901	O909	O911	O919	O921	O929	O931	O939
OUT2	O902	O90A	O912	O91A	O922	O92A	O932	O93A
OUT3	O903	O90B	O913	O91B	O923	O92B	O933	O93B
OUT4	O904	O90C	O914	O91C	O924	O92C	O934	O93C

	Axis 8	Axis 9	Axis 10	Axis 11	Axis 12	Axis 13	Axis 14	Axis 15
IN0	I940	I948	I950	I958	I960	I968	I970	I978
IN1	I941	I949	I951	I959	I961	I969	I971	I979
IN2	I942	I94A	I952	I95A	I962	I96A	I972	I97A
IN3	I943	I94B	I953	I95B	I963	I96B	I973	I97B
IN4	I944	I94C	I954	I95C	I964	I96C	I974	I97C
IN5	I945	I94D	I955	I95D	I965	I96D	I975	I97D
IN6	I946	I94E	I956	I95E	I966	I96E	I976	I97E
IN7	I947	I94F	I957	I95F	I967	I96F	I977	I97F
OUT0	O940	O948	O950	O958	O960	O968	O970	O978
OUT1	O941	O949	O951	O959	O961	O969	O971	O979
OUT2	O942	O94A	O952	O95A	O962	O96A	O972	O97A
OUT3	O943	O94B	O953	O95B	O963	O96B	O973	O97B
OUT4	O944	O94C	O954	O95C	O964	O96C	O974	O97C

	Axis 16	Axis 17	Axis 18	Axis 19	Axis 20	Axis 21	Axis 22	Axis 23
IN0	I980	I988	I990	I998	I9A0	I9A8	I9B0	I9B8
IN1	I981	I989	I991	I999	I9A1	I9A9	I9B1	I9B9
IN2	I982	I98A	I992	I99A	I9A2	I9AA	I9B2	I9BA
IN3	I983	I98B	I993	I99B	I9A3	I9AB	I9B3	I9BB
IN4	I984	I98C	I994	I99C	I9A4	I9AC	I9B4	I9BC
IN5	I985	I98D	I995	I99D	I9A5	I9AD	I9B5	I9BD
IN6	I986	I98E	I996	I99E	I9A6	I9AE	I9B6	I9BE
IN7	I987	I98F	I997	I99F	I9A7	I9AF	I9B7	I9BF
OUT0	O980	O988	O990	O998	O9A0	O9A8	O9B0	O9B8
OUT1	O981	O989	O991	O999	O9A1	O9A9	O9B1	O9B9
OUT2	O982	O98A	O992	O99A	O9A2	O9AA	O9B2	O9BA
OUT3	O983	O98B	O993	O99B	O9A3	O9AB	O9B3	O9BB
OUT4	O984	O98C	O994	O99C	O9A4	O9AC	O9B4	O9BC

	Axis 24	Axis 25	Axis 26	Axis 27	Axis 28	Axis 29	Axis 30	Axis 31
IN0	I9C0	I9C8	I9D0	I9D8	I9E0	I9E8	I9F0	I9F8
IN1	I9C1	I9C9	I9D1	I9D9	I9E1	I9E9	I9F1	I9F9
IN2	I9C2	I9CA	I9D2	I9DA	I9E2	I9EA	I9F2	I9FA
IN3	I9C3	I9CB	I9D3	I9DB	I9E3	I9EB	I9F3	I9FB
IN4	I9C4	I9CC	I9D4	I9DC	I9E4	I9EC	I9F4	I9FC
IN5	I9C5	I9CD	I9D5	I9DD	I9E5	I9ED	I9F5	I9FD
IN6	I9C6	I9CE	I9D6	I9DE	I9E6	I9EE	I9F6	I9FE
IN7	I9C7	I9CF	I9D7	I9DF	I9E7	I9EF	I9F7	I9FF
OUT0	O9C0	O9C8	O9D0	O9D8	O9E0	O9E8	O9F0	O9F8
OUT1	O9C1	O9C9	O9D1	O9D9	O9E1	O9E9	O9F1	O9F9
OUT2	O9C2	O9CA	O9D2	O9DA	O9E2	O9EA	O9F2	O9FA
OUT3	O9C3	O9CB	O9D3	O9DB	O9E3	O9EB	O9F3	O9FB
OUT4	O9C4	O9CC	O9D4	O9DC	O9E4	O9EC	O9F4	O9FC

5.7.4 Setting Axis Numbers

In the VLBus–V mode, an axis number should be assigned to the servo amplifier. The axis number should be in the range between zero (0) and the number obtained by subtracting “1” from the total axis number.
The numbers should be sequential. If a number is skipped such as 0, 1, 3, or the same number is used repeatedly, an error will occur. The axis numbers do not need to correspond with the cable connecting order.
Optical cable is used for connecting the servo amplifier, and the switch should be changed over according to the cable length used. See the illustration below for switching. (The maximum optical cable length is 20 m.)

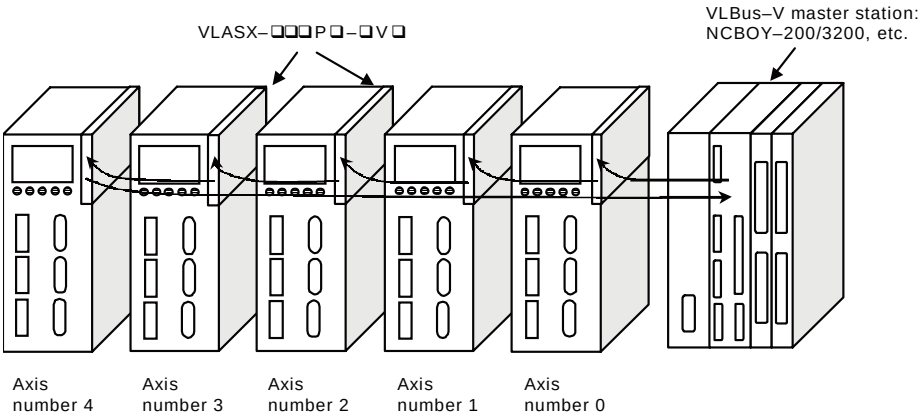

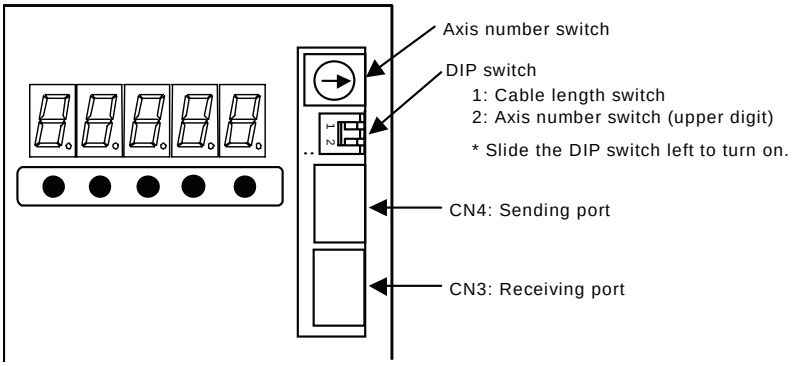

Switch setting for axis numbers

Axis number	Axis number switch	DIP switch 2	Axis number	Axis number switch	DIP switch 2
0	0	OFF	16	0	ON
1	1		17	1	
2	2		18	2	
3	3		19	3	
4	4		20	4	
5	5		21	5	
6	6		22	6	
7	7		23	7	
8	8		24	8	
9	9		25	9	
10	A		26	A	
11	B		27	B	
12	C		28	C	
13	D		29	D	
14	E		30	E	
15	F		31	F	

Note: Turn the power off once, then on again to make the axis number effective.

Switch setting for cable length

Cable length	DIP switch 1
Up to 10 m	OFF
From 10 m to 20 m	ON

The cable length is the length of a cable for connecting with CN4 (Sending port).

* On the VLBus–V master station side, use NC parameter NP011 (Transmission fiber cable length) for the setting.

5.7.5 Confirming Axis Numbers

After you have specified the axis numbers, make sure of the setting on the operation/display unit.
A numeral following [An–] indicates the axis number. While the numeral is flashing, the axis number is not effective. Turn the power off once, then on again.
Unless the display/operation unit option is provided, use the personal computer tool (SHANX).

Change over the display to [c].

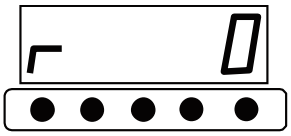

⇒
Press the MODE key.

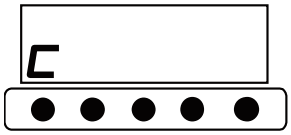

Display [An–**].

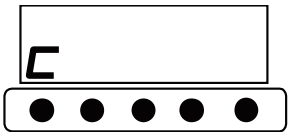

⇒
Press the TM key four (4) times.

The above display shows that axis number 3 is set.

5.7.6 Cautions on Using Optical Cable

General specifications:

- Ambient temperature: 0 ~ 60°C
- Ambient humidity: 35 ~ 90 %RH
- Tensile strength: 7 kg
- Minimum bending radius: 50 mm
- Plug drawing strength: 3 kg

1. DO NOT exert a force larger than the maximum allowable tension. Otherwise, the cable property will deteriorate or the cable will be damaged.
2. DO NOT install the cable with a radius smaller than the minimum bending radius. Otherwise, the cable property will deteriorate or the cable will be damaged.
3. DO NOT twist the optical fiber cable. Otherwise, the cable property will deteriorate or the cable will be damaged.
4. If the optical fiber cable is passed in the duct piping or bundled with other kind of wiring, plasticizer contained in the piping or wiring may contact the optical fiber, causing deterioration of the cable property. To avoid this, DO NOT keep the optical fiber cable in contact with plasticized PVC material.
5. When you plug in or out an optical connector, be sure to hold the connector. Otherwise, the cable property will deteriorate or the cable will be damaged.
6. DO NOT exert an excessively large force on the cable, or DO NOT drop a tool on the cable. Otherwise, the cable property will deteriorate or the cable will be damaged.
7. The optical fiber cable will deteriorate in property in a high temperature/high humidity environment.
8. Side stress on the optical fiber cable will damage or deteriorate the property of the cable. DO NOT step on the cable or secure it with an unusually large force.
9. DO NOT install the optical fiber cable in an environment where it is exposed to sunlight, UV or X ray because its property may deteriorate in such an environment.
10. DO NOT use this cable for applications in which it directly contacts foods.

11. The optical fiber cable is combustible. When using or storing it, observe the instructions on temperature and humidity.

12. DO NOT leave dust or dirt on the optical fiber cable end or connector. Otherwise, the cable property will deteriorate or the cable will be damaged.

13. When cleaning the optical fiber, use water or diluted detergent.

14. DO NOT leave solvent on the optical fibers. Otherwise, the cable property will deteriorate or the cable will be damaged.

15. The optical fiber cable should be disposed of only by an industrial waste disposal company who has an incinerator for hydrofluoric and chlorine gases.

5.7.7 Connecting Optical Communication Cable

The cable is directional. A match-mark is provided on the receiving side.
The length of the cable connected on the sending side can be adjusted.

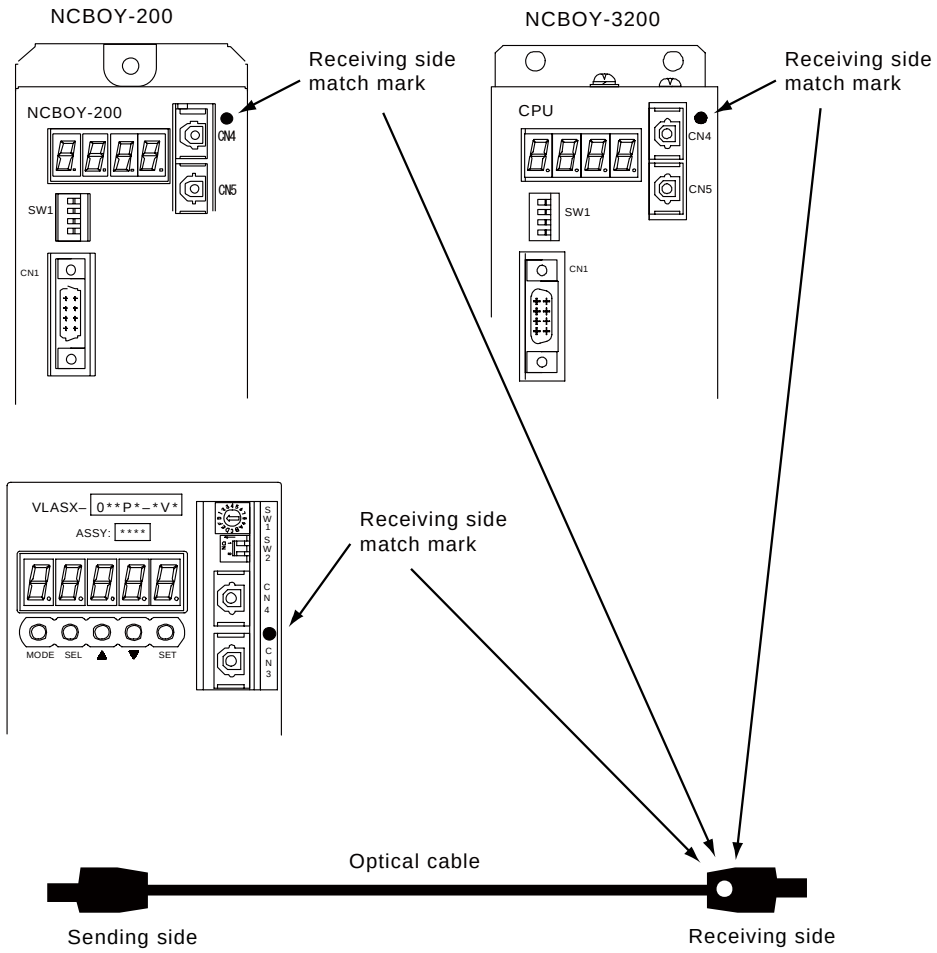

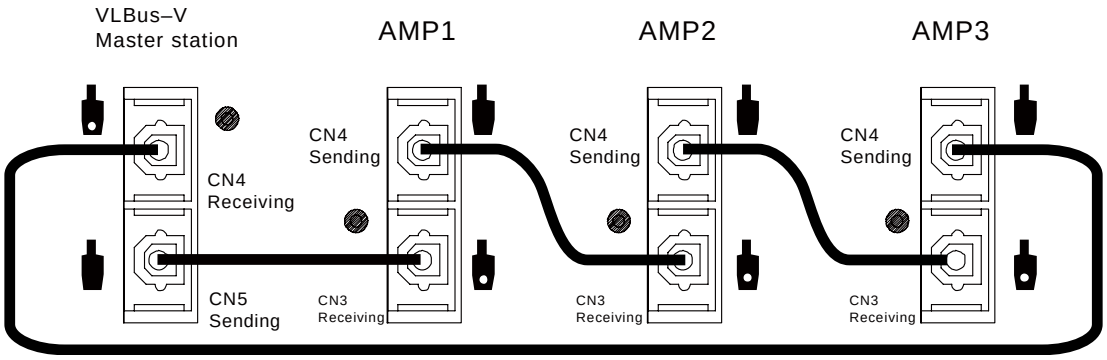

5.8 User Parameter

5.8.1 Standard (Control Mode 1 ~ 6)

Symbol	Name	Unit	Setting range	Factory-setting	Function
UP01 POWER OFF	Control mode	None	0 ~ 6	0	Specifies the control mode for the servo amplifier. =1: Speed control mode =2: Current control mode =3: Position control mode =4: Speed/current/position control mode =5: Direct feed mode =6: Draw control mode (Effective in all modes.)
UP02 POWER OFF	Motor code	None	0 ~ 64999	00000	Specify the motor model used for operation by motor code. The motor code consists of a motor number and a sensor number. For details, see the combination table given in the Introduction section. (Effective in all modes.)
UP03 POWER OFF	Resolver cable length	1 m	1 ~ 120	5	When the resolver serves as the motor sensor, specify the cable length. (For other than the resolver, this data is neglected.) (Effective in all modes.)

Symbol	Name	Unit	Setting range	Factory-setting	Function
UP04 POWER OFF	Numerator of electronic gear Functional Description	1 pulse	1 ~ 65535	1	Specify the travel distance per pulse for the pulse output. <Pulse output> When the resolver is used as the motor sensor, the number of pulses per one (1) full turn of the motor can be figured out from the following expression. APD (BPD) = [24000] × [1/4] × [UP05/UP04] When the 17-bit encoder is used as the motor sensor, the number of pulses per one (1) full turn of the motor can be calculated from the following expression. APD (BPD) = [131072] × [1/4] × [UP05/UP04] The forward/reverse pulse can be selected by means of UP17. It is also possible to select the external display differential output or ABS output, using UP18. * The positions of the numerator and denominator exchange when the expression is used for the pulse command and pulse output. (Effective in all modes.)
UP05 POWER OFF	Denominator of electronic gear Functional Description	1 pulse	1 ~ 65535	1	
UP06	Zero point shift value	0.01 deg	0.00 ~ 360.00	0.00	Specify the phase shift value of motor axis zero point pulse in angle. When the resolver is used as a motor sensor, the zero (0) point pulse generates twice during one (1) full turn of motor. Specify the value, taking one (1) full turn of motor as 360 deg. (Effective in all modes.)
UP07	In-position width Functional Description	1 pulse	1 ~ 65535	50	When the deviation during position control drops to below this set value, the signal turns on. Specify the value in terms of motor sensor pulses. (Effective in modes 3 and 4.)

Symbol	Name	Unit	Setting range	Factory-setting	Function
UP08	Current limit value Functional Description	0.1 %	0.0 ~ 100.0	100.0	Specify the current limit value against the motor maximum current in percentage while the current limit changeover signal is turned on. When “0” is specified, the 4-step current limit mode takes effect. This parameter is inoperative in the analog current limit command mode. (Effective in all modes.)
UP09	Soft start acceleration time Functional Description	0.001 s	0.000 ~ 65.535	0.000	It is possible to add a linear acceleration/ deceleration to the speed command in the speed control mode. Specify the time during which the speed is to be accelerated from zero (0) to the maximum speed, using UP09. Specify the time during which the speed is to be decelerated from the maximum speed to zero (0), using UP10. This function is operative, however, only when zero (0) is specified for UP11. (Effective in modes 1, 4 and 5.)
UP10	Soft start deceleration time Functional Description	0.001 s	0.000 ~ 65.535	0.000	
UP11	S-type acceleration/ deceleration time Functional Description	0.001 s	0.000 ~ 65.535	0.000	Specify the time constant when adding an S-type acceleration/deceleration to the speed command in the speed control mode. To be more specific, specify the time during which the speed is to be accelerated by 5 % to 95 %. When zero (0) is specified for UP11, however, the soft start acceleration & deceleration time set by UP09 and UP10 becomes operative. In the position control mode, an S-type acceleration/ deceleration can be added to position command pulse. When this happens, the soft start acceleration/ deceleration time parameters are ignored. (Effective in modes 1, 3, 4, 5 and 6.)

Symbol	Name	Unit	Setting range	Factory-setting	Function
UP12 POWER OFF	ABS mode	None	000 ~ 112	000	This parameter specifies the coordinate clear mode relating to ABS sensor, use or non-use of ABS sensor and output prohibition or non-prohibition of “home point unsaved” warning in three (3) digits. Even when the ABS sensor is used, if the non-use of ABS sensor is selected, the battery alarm, home point saving and multi rotations cannot be controlled any further, and the sensor can serve as an incremental sensor. ®®® — Coordinate clear mode =0: All clear =1: Only rotation count is cleared. (Resolver ABS only) =2: Clearing prohibited. ABS mode =0: Non-use of ABS sensor =1: Use of ABS sensor Output prohibition or non-prohibition of “home point unsaved” warning =0: YES =1: NO (Effective in all modes.)

Symbol	Name	Unit	Setting range	Factory-setting	Function
UP13 POWER OFF	Holding brake operation	None	00 ~ 91	01	Specify the specification of the holding brake operation. ®® — Brake operation =0: Starts deceleration with zero (0) deceleration time and turns on the brake when the speed is below the UP14 set value (brake ON speed). =1: Starts deceleration along a deceleration curve set then and turns on the brake when the speed is below the UP14 set value (brake ON speed). At alarm generation or PON OFF, however, the holding brake actuates immediately. Servo lock holding time after MBO output OFF =0: 100 ms ≠0: Set value × 100 ms At alarm generation or PON OFF, however, the holding brake actuates immediately. The servo lock holding time should be minimized where possible. (Effective in all modes.)
UP14	Brake ON speed Functional Description	0.1 %	0.0 ~ 100.0	10.0	Specify the holding brake ON speed. This parameter is used to avoid the holding brake serving as the speed control brake. When the speed drops to below this set value, the holding brake turns on. The maximum speed is taken as 100 %. (Minimum speed 200 min–1) (Effective in all modes.)

Symbol	Name	Unit	Setting range	Factory-setting	Function
UP15	Analog command polarity	None	00 ~ 11	00	Specify the polarity for the analog command input of speed command and current command. Use two (2) digits for setting these data. ®® —— Speed command =0: Motor forward rotation with the positive voltage. =1: Motor reverse rotation with the positive voltage. Current command =0: Motor forward rotation torque with the positive voltage. =1: Motor reverse rotation torque with the positive voltage. (Effective in modes 1, 2, 3, 4 and 5.)
UP16	Pulse command type	None	000 ~ 112	000	Specify the type and polarity of the position command pulse. Use three (3) digits for setting these data. ®®® —— Type =0: Forward/reverse pulse =1: Phase AB pulse =2: Pulse and forward/reverse signal Polarity =0: Not reversed =1: Reversed Setting of ×4 multiplication =0: Provided =1: Not provided (Effective in modes 1, 3, 4, 5 and 6.)
UP17	Pulse output type	None	00 ~ 12	01	Specify the pulse output type when the pulse output is selected by means of UP18. Use two (2) digits for setting these data. ®® —— Type =0: Forward/reverse pulse =1: Phase AB pulse =2: Pulse and forward/reverse signal Polarity =0: Not reversed =1: Reversed (Effective in all modes.)

Symbol	Name	Unit	Setting range	Factory-setting	Function
UP18	Differential output type	None	0000 ~ 6635	0000	Specify the differential output type by a four (4) digit number. ®®®® — Output selection =0: Pulse output (present value) =1: DPA–80 output =2: Present value output =3: Undefined =4: Pulse output (command value) =5: Draw pulse output Present value output type =0: 32 bits =1: 23 bits + parity =2: 24 bits + parity =3: 31 bits + parity Display data while monitor changeover is ON. Display data while monitor changeover is OFF. =0: Motor speed =1: Present value =2: Motor current =3: Electronic thermal value =4: Motor phase amount (mechanical angle) =5: Machine speed =6: Command value (Effective in all modes.)

Symbol	Name	Unit	Setting range	Factory-setting	Function
UP19 POWER OFF	Position control polarity	None	0 ~ 1	0	Specify the motor revolving direction when the forward pulse is input by the pulse command. The motor revolving direction and present value incrementing direction are changed also. =0: The motor revolves in the forward direction with the forward rotation pulse, and the present value increments while the motor revolves in the forward direction. =1: The motor revolves in the reverse direction with the forward rotation pulse, and the present value increments while the motor revolves in the reverse direction. (Effective in all modes.)
UP20	Draw magnification	None	0 ~ 2	0	Specify the weight per bit of the draw set value. =0: 0.01 % per bit =1: 0.1 % per bit =2: 1 % per bit (Effective in mode 6.)
UP21	External reverse-current absorption resistance value	0.1 Ω	0 ~ 100.0	0.0	This parameter should be specified when an external reverse-current absorption resistor is used. When 0.0 is specified, the value of the internal reverse-current absorption resistor is selected. (Effective in all modes.)
UP22	External reverse-current absorption resistor capacity	0.01 kW	0.00 ~ 327.67	0.00	Specify the external reverse-current absorption resistor capacity. When 0.00 is specified, the internal reverse-current absorption resistor capacity is selected. (Effective in all modes.)

Symbol	Name	Unit	Setting range	Factory-setting	Function
UP23 POWER OFF	Common power supply mode	None	0000 ~ 1112	0000	Specify the conditions for use by four (4) digits when the PN power supply is shared. Contact us before sharing the PN power supply. ®®®® — Reverse-current absorption monitor =0: Detection of AL9, AL10 =1: AL9, AL10 not available =2: AL10 not available Reverse-current absorption function =0: Effective =1: Ineffective Main power supply monitor =0: Effective =1: Ineffective Auto-discharge function =0: Effective =1: Ineffective (Effective in all modes.)
UP24	Feedrate 1	0.01 %	0.00 ~ 327.67	100.00	Used for setting feedrate 1. Specify the value to the maximum motor speed in percentage. When zero (0) is specified, analog input voltage REF becomes effective. (Effective in mode 5.)
UP25	Feedrate 2	0.01 %	0.00 ~ 327.67	50.00	Used for setting feedrate 2. Specify the value to the maximum motor speed in percentage. When zero (0) is specified, analog input voltage CLI becomes effective. (Effective in mode 5.)
UP26	Feedrate 3	0.01 %	0.00 ~ 327.67	25.00	Used for setting feedrate 3. Specify the value to the maximum motor speed in percentage. (Effective in mode 5.)
UP27	Feedrate 4	0.01 %	0.00 ~ 327.67	12.50	Used for setting feedrate 4. Specify the value to the maximum motor speed in percentage. (Effective in mode 5.)

Symbol	Name	Unit	Setting range	Factory-setting	Function
UP28	Stop detection speed	1 min^{-1}	1 ~ 32767	50	When the motor speed drops to below this set value, the stop detection signal turns on. At a motor speed below this parameter value, the “forward rotation ON” and “reverse rotation ON” signals turn off. Also, when the stop detection signal turns on, the ”gain reduction during stop” function operates. (Effective in all modes.)
UP29	Specified speed level Functional Description	1 min^{-1}	0 ~ 32767	3000	Once the motor speed has entered the range of UP29 ± UP30, the specified speed level signal turns on. If zero (0) is specified for this parameter, however, the specified speed level signal turns on when the speed reaches the then command speed ± UP30. (In the position control mode, the command speed calculated from the position command pulses is selected.) (Effective in modes 1, 4, 5 and 6.)
UP30	Specified speed range	1 min^{-1}	1 ~ 10000	50	Used for setting the permissible detection width of the specified speed level signal. When the real motor speed has reached the range of command speed ± UP30, the specified speed level signal turns on. (Effective in modes 1, 4, 5 and 6.)
UP31	Motor test speed	1 min^{-1}	1 ~ 10000	50	Specify the motor speed for motor test operation. (Effective in all modes.)
UP32	Analog I/O selection	None	00 ~ 21	10	Select the analog I/O. ®® — Analog input selection =0: Standard analog inputs (REF, CLI) are used. =1: Analog inputs (AD1, AD2) are used. (Option) Analog output selection =0: Analog output is not used. =1: Not used. =2: Analog outputs (DA1, DA2) are used. (Option) (Effective in all modes.)
UP33	Load factor time constant	1 s	1 ~ 60	30	Specify the time constant for calculating the effective load factor. (Effective in all modes.)

Symbol	Name	Unit	Setting range	Factory-setting	Function
UP34	Limit changeover method	None	000 ~ 121	011	Specify the current limit in the speed control mode, the speed limit in the current control mode and the 4-step current limit by three (3) digits. ®®® — Speed limit =0: Limit by REF input when LCHG signal turns on. =1: Limit by UP35 when LCHG signal turns on. Current limit =0: Limit with CLI input when CCD signal turns on. =1: Limit by UP08 (UP36 ~ UP39) when CCD signal turns on. =2: Limit by UP08 (UP36 ~ UP39) at all times. 4-step current limit =0: Changeover with a sign of speed command. =1: Changeover with a sign of speed detection. (Effective in all modes.)
UP35	Speed limit value Functional Description	1 min^{-1}	1 ~ 32767	4000	Specify the speed limit value which becomes effective when speed limit changeover signal LCHG turns on in the current control mode. This parameter is effective only when “1” is specified for the digit of 1 of UP34 (control changeover method). (Effective in modes 2 and 4.)
UP36	Forward drive current limit value Functional Description	0.1 %	0.0 ~ 100.0	100.0	This parameter becomes valid when the 4-step current limit mode is selected with UP08 = 0. It limits the current which generates forward drive torque. (Effective in modes 1, 3, 4, 5 and 6.)
UP37	Forward rotation absorption current limit value Functional Description	0.1 %	0.0 ~ 100.0	100.0	This parameter becomes valid when the 4-step current limit mode is selected with UP08 = 0. It limits the current which generates forward rotation absorption torque. (Effective in modes 1, 3, 4, 5 and 6.)

Symbol	Name	Unit	Setting range	Factory-setting	Function
UP38	Reverse drive current limit value Functional Description	0.1 %	0.0 ~ 100.0	100.0	This parameter becomes valid when the 4-step current limit mode is selected with UP08 = 0. It limits the current which generates reverse drive torque. (Effective in modes 1, 3, 4, 5 and 6.)
UP39	Reverse rotation absorption current limit value Functional Description	0.1 %	0.0 ~ 100.0	100.0	This parameter becomes valid when the 4-step current limit mode is selected with UP08 = 0. It limits the current which generates reverse rotation absorption torque. (Effective in modes 1, 3, 4, 5 and 6.)
UP40	Drive absorption detection width	0.1 %	0.0 ~ 100.0	5.0	Specify the ON current of the drive ON signal and absorption ON signal. When a current exceeding this set value has been detected, each signal turns on. (Effective in mode 2.)
UP41	Numerator of display magnification	None	1 ~ 65535	1	Specify the magnification of data which is to be displayed on the external display (DPA–80). This function is effective for the machine speed, machine coordinate present value and machine coordinate command value. It is also effective for the machine speed (F) shown on the display/operation unit. $\begin{bmatrix} \text{Machine coordinate present value} \\ \text{Machine speed} \\ \text{Machine coordinate command value} \end{bmatrix} = \begin{bmatrix} \text{Present value} \\ \text{Motor speed} \\ \text{Command value} \end{bmatrix} \times \frac{\text{UP41}}{\text{UP42}}$ (Effective in all modes.)
UP42	Denominator of display magnification	None	1 ~ 65535	1	

<table>
<tr><th>Symbol</th><th>Name</th><th>Unit</th><th>Setting range</th><th>Factory-setting</th><th>Function</th></tr>
<tr><td>UP43</td><td>Decimal point position of display unit</td><td>None</td><td>0 ~ 7</td><td>0</td><td>Specify the position of the decimal point shown on the external display unit.
=0: Without decimal point
=1: Lowest digit
=2: 2nd digit
=3: 7th digit
This function is effective for the machine speed, present value and command pulse. The decimal point is predetermined to the 2nd digit for the motor current and motor phase. No decimal point is shown on the display/operation unit.
(Effective in all modes.)</td></tr>
<tr><td>UP44</td><td>Sequence input reversal</td><td>None</td><td>000 ~ 1FE</td><td>000</td><td>Specify the logical inversion of sequence input in hexadecimal notation. Set each bit to “0” for non-inversion and “1” for inversion.
INO (PON input) cannot be inversed in other than the T series compatible sequence.
(Digit of 100 is predetermined to zero (0).)
<table><tr><td>Input address</td><td>IN7, IN6, IN5, IN4</td><td>IN3, IN2, IN1, IN0</td></tr><tr><td>Logical inversion</td><td>1/0, 1/0, 1/0, 1/0</td><td>1/0, 1/0, 1/0, 0</td></tr><tr><td>Hexadecimal</td><td>0 ~ F</td><td>0 ~ E</td></tr></table>[0: Non-inversion]
[1: Inversion]
(Effective in all modes.)</td></tr>
<tr><td>UP45</td><td>Sequence output reversal</td><td>None</td><td>00 ~ FF</td><td>00</td><td>Specify the logical inversion of sequence output in hexadecimal notation. Set each bit to “0” for non-inversion and “1” for inversion.
<table><tr><td>Output address</td><td>OUT7, OUT6, OUT5, OUT4</td><td>OUT3, OUT2, OUT1, OUT0</td></tr><tr><td>Logical inversion</td><td>1/0, 1/0, 1/0, 1/0</td><td>1/0, 1/0, 1/0, 1/0</td></tr><tr><td>Hexadecimal</td><td>0 ~ F</td><td>0 ~ F</td></tr></table>[0: Non-inversion]
[1: Inversion]
(Effective in all modes.)</td></tr>
</table>

Symbol	Name	Unit	Setting range	Factory-setting	Function
UP46 POWER OFF	Sequence I/O selection	None	0 ~ 64	0	Used for selecting a combination of 64 types of sequence I/O. To select the standard sequence I/O, specify zero (0). When number 1 or over is specified, a special sequence is selected. For the operation modes and signal assignment, see Para. 5.9.1. When a number of 41 to 64 is specified, a T series compatible sequence can be selected. (Effective in all modes.)
UP47	In-position timer	1 ms	0 ~ 2000	20	Specify the minimum ON time of the in-position signal. This value indicates the in-position OFF delay time. (Effective in modes 3 and 4.)
UP48 POWER OFF	Electronic gear magnification	×1	1 ~ 100	1	This function is useful when the magnification is not enough only by setting of electronic gear. The magnification setting function is provided because the sensor split count is expected to become unusually large, compared with the external command pulse frequency. (Effective in all modes.)

Symbol	Name	Unit	Setting range	Factory-setting	Function
UP49	VMOUT output selection	None	000 ~ 399	000	Specify the output data and type of analog output VMOUT. ®®® — VMOUT output data =0: Detection speed (filter output) =1: Detection current (filter output) =2: Present value (after processing of electronic gear) =3: Present value (sensor pulse) =4: Deviation (after processing of electronic gear) =5: Deviation (sensor pulse) =6: Speed command =7: Current command =8: Position command (speed command conversion value) =9: Motor phase =10: Detection speed (without filter) =11: Detection current (without filter) =12: BL value =13: OL value =14: RL value =15: Fin temperature =16: Speed deviation =17: Current deviation Output type =0: Non-reversed output =1: Reversed output =2: Absolute value output =3: Non-reversed output without clamp (Effective in all modes.)

Symbol	Name	Unit	Setting range	Factory-setting	Function
UP50	VMOUT output scale	0.1	0.1 ~ 3276.7	300.0	Specify the output scale of analog output VMOUT. (Ex.) To set 2 A per 1 V of monitor output voltage, specify “2.0”. (2.0 A/1 V) Scales can be set in the following ranges for each data type. Speed: 0.1 ~ 3276.7 min^{-1}/V Current: 0.1 ~ 3276.7 A/V Pulse: 0.1 ~ 3276.7 P/V Voltage: 0.1 ~ 3276.7 V/V Angle: 0.1 ~ 3276.7 deg/V Percentage: 0.1 ~ 3276.7 %/V Temperature: 0.1 ~ 3276.7 °C/V (Effective in all modes.)
UP51	AMOUT output selection	None	000 ~ 399	001	Specify the output data and type of analog output AMOUT. The details are the same as UP49 above. (Effective in all modes.)
UP52	AMOUT output scale	0.1	0.1 ~ 3276.7	5.0	Specify the output scale of analog output AMOUT. The details are the same as UP50 above. (Effective in all modes.)
UP64	Draw value	UP20	0 ~ 32767	0	A draw value can be specified by means of this parameter in lieu of using the sequence input. When zero (0) is specified, the sequence command takes effect. When a number other than zero (0) is specified, a value obtained by multiplying the specified value by the draw magnification of UP20 is used as the draw value. (Effective in mode 6.)

5.8.2 VLBus–V (Control Mode 31)

Symbol	Name	Unit	Setting range	Factory-setting	Function
UP01 POWER OFF	Control mode	None	0 ~ 31	31	Number “31” is factory-set in the VLBus-V mode.
UP02 POWER OFF	Motor code	None	0 ~ 64999	00000	Specify the motor model used for operation by motor code. The motor code consists of a motor number and a sensor number. For details, see the combination table given in the Introduction section.
UP03 POWER OFF	Resolver cable length	1 m	1 ~ 120	5	When the resolver serves as the motor sensor, specify the cable length. For other than the resolver, this data is neglected.
UP04 POWER OFF	Numerator of electronic gear	1 pulse	1 ~ 65535	1	Specify the count of motor revolution to programmed travel distance. Figure out the number of pulses corresponding to NC parameter NP005 (programming resolution). Set the result of the calculation in UP05 (denominator) and UP04 (numerator). No. of pulses per programming resolution $= \frac{\text{Programming resolution} \times \text{Split count}}{\text{Travel distance per 1 full turn of motor}}$ (Ex.: Ball screw pitch × deceleration ratio) Split count of resolver: 24000 Split count of 17-bit serial encoder: 131072
UP05 POWER OFF	Denominator of electronic gear	1 pulse	1 ~ 65535	1	
UP06	Zero point shift value	0.01 deg	0.00 ~ 360.00	0.00	Specify the phase shift value of motor axis zero point pulse in angle. When the resolver is used as a motor sensor, the zero (0) point pulse generates twice during one (1) full turn of motor. Specify the value, taking one (1) full turn of motor as 360 deg.
UP07	In-position width	1 pulse	1 ~ 65535	50	When the deviation during position control drops to below this set value, the in-position signal (Q*©©INP) turns on. Specify the value in terms of motor sensor pulses.
UP11	S-type acceleration/ deceleration time	0.001 s	0.000 ~ 65.535	0.000	Not used. (This value is set in the NCBOY.) When the NCBOY–200/3200 is located on the master side, specify “0-.000.”

Symbol	Name	Unit	Setting range	Factory-setting	Function
UP12 POWER OFF	ABS mode	None	000 ~ 112	000	This parameter specifies the coordinate clear mode relating to ABS sensor, use or non-use of ABS sensor and output prohibition or non-prohibition of “home point unsaved” warning in three (3) digits. Even when the ABS sensor is used, if the non-use of ABS sensor is selected, the battery alarm, home point saving and multi rotations cannot be controlled any further, and the sensor can serve as an incremental sensor. ®®® — Coordinate clear mode =0: All clear =1: Only rotation count is cleared. (Resolver ABS only) =2: Clearing prohibited. ABS mode =0: Non-use of ABS sensor =1: Use of ABS sensor Output prohibition or non-prohibition of “home point unsaved” warning =0: YES =1: NO

Symbol	Name	Unit	Setting range	Factory-setting	Function
UP13 POWER OFF	Holding brake operation	None	000 ~ 191	001	Specify the specification of the holding brake operation. ®®® — Brake operation =0: Starts deceleration with zero (0) deceleration time and turns on the brake when the speed is below the UP14 set value (brake ON speed). =1: Starts deceleration with S-type acceleration/deceleration time (Q*©©SAD or Q*ISAD) selected then and turns on the brake when the speed drops to below the UP14 value. Deceleration with setting of Q*©©DEC or Q*IDEC is not executed and the brake actuates with zero (0) deceleration time. At alarm generation or PON OFF, however, the holding brake actuates immediately. Servo lock holding time after MBO output OFF =0: 100 ms ≠0: Set value × 100 ms At alarm generation or PON OFF, however, the holding brake actuates immediately. The servo lock holding time should be minimized where possible. Selection of servo brake function =0: Invalid =1: Valid
UP14	Brake ON speed	0.1 %	0.0 ~ 100.0	10.0	Specify the holding brake ON speed. This parameter is used to avoid the holding brake serving as the speed control brake. When the speed drops to below this set value, the holding brake turns on. The maximum speed is taken as 100 %.

Symbol	Name	Unit	Setting range	Factory-setting	Function
UP16	Pulse command type	None	0000 ~ 2112	0000	Specify the type and polarity of the position command pulse. Each of the three (3) digits should be specified independently. ®®®® — Type =0: Forward/reverse pulse =1: Phase AB pulse =2: Pulse and forward/reverse signal Polarity =0: Not reversed =1: Reversed Selection of multiplication by 4 =0: Provided =1: Not provided Selection of position feedback =0: Use of motor sensor =1: With full-closed loop changeover by Q*©©CHFC. =2: Same as 1 above. AL49 is not detected, however.
UP17	Pulse output type	None	00 ~ 12	01	Specify the pulse output type when 0, 4 or 6 is specified for the digit of 1 of parameter UP18. Specify a two (2)-digit value. ®® — Type =0: Forward/reverse pulse =1: Phase AB pulse =2: Pulse and forward/reverse signal Polarity =0: Not reversed =1: Reversed

Symbol	Name	Unit	Setting range	Factory-setting	Function
UP18	Differential output type	None	0000 ~ 6636	0000	Specify the differential output type by a four (4) digit number. ®®®® Output selection =0: Pulse output (present value) =1: DPA–80 output =2: Present value output =3: Undefined =4: Pulse output (command value) =5: Undefined =6: User pulse output (*) Present value serial output type =0: 32 bits =1: 23 bits + parity =2: 24 bits + parity =3: 31 bits + parity Not used (Any setting is ignored.) Display data =0: Motor speed =1: Machine coordinate present value =2: Motor current =3: Electronic thermal value =4: Motor phase amount (mechanical angle) =5: Machine speed =6: Machine coordinate command value * For any user pulse output, set register Q*©©POUTR of NCBOY.

Symbol	Name	Unit	Setting range	Factory-setting	Function
UP19 POWER OFF	Position control polarity	None	0 ~ 1	0	Specify the relationship between the motor revolving direction and coordinate increment direction. =0: Increment of coordinate when the motor revolves in the forward direction. =1: Increment of coordinate when the motor revolves in the reverse direction.
UP21	External reverse-current absorption resistance value	0.1 Ω	0 ~ 100.0	0.0	This parameter should be specified when an external reverse-current absorption resistor is used. When 0.0 is specified, an internal reverse-current absorption resistor can be used.
UP22	External reverse-current absorption resistor capacity	0.01 kW	0.00 ~ 327.67	0.00	Specify the external reverse-current absorption resistor capacity. When 0.0 is specified, an internal reverse-current absorption resistor is selected.
UP23 POWER OFF	Common power supply mode	None	0000 ~ 1112	0000	Specify the conditions for use by four (4) digits when the PN power supply is shared. Contact us before sharing the PN power supply. ®®®® — Reverse-current absorption monitor =0: Detection of AL9, AL10 =1: AL9, AL10 not available =2: AL10 not available Reverse-current absorption function =0: Effective =1: Ineffective Main power supply monitor =0: Effective =1: Ineffective Auto-discharge function =0: Effective =1: Ineffective
UP28	Stop detection speed	1 min^{-1}	1 ~ 32767	50	When the motor speed drops to below this set value, the stop detection signal (Q*©©STA) turns on. Also, when the stop detection signal turns on, the ”gain reduction during stop” function operates.

Symbol	Name	Unit	Setting range	Factory-setting	Function
UP29	Specified speed level	1 min^{-1}	0 ~ 32767	3000	When the motor speed falls under the range of UP29±UP30 during speed control (VELM) or current control (CURM), the specified speed level signal (Q*©©SAR) turns on. When zero (0) is specified for this parameter, the specified speed level signal turns on in the range of “command speed ± UP30.” (In the position control, the command speed calculated from position command pulses is selected.)
UP30	Specified speed range	1 min^{-1}	1 ~ 10000	50	This parameter specifies the allowable detection range of the specified speed level signal (Q*©©SAR). When the actual speed reaches the range of “command speed ± UP30”, the specified speed level signal turns on.
UP31	Motor test speed	1 min^{-1}	1 ~ 10000	50	Specify the motor speed for motor test operation.
UP32	Analog I/O selection	None	00 ~ 10	10	Select the analog I/O. ®® — Undefined Analog output selection =0: Analog output is not used. =1: VMOUT and AMOUT are used.
UP33	Load factor time constant	1 s	1 ~ 60	30	Specify the time constant for calculating the effective load factor.
UP39	Current limit value during servo brake function	0.1 %	0.0 ~ 100.0	100.0	Specify the current limit value during execution of the servo brake function while the servo brake function is operative (UP13 = 1©©).
UP41	Numerator of display magnification	None	1 ~ 65535	1	Specify the magnification of data which is to be displayed on the external display (DPA–80). This function is effective for the machine speed, machine coordinate present value and machine coordinate command value. It is also effective for the machine speed (F) shown on the display/operation unit. [Machine coordinate present value / Machine speed / Machine coordinate command value] = [Present value / Motor speed / Command value] × UP41/UP42
UP42	Denominator of display magnification	None	1 ~ 65535	1	

<table>
<tr><th>Symbol</th><th>Name</th><th>Unit</th><th>Setting range</th><th>Factory-setting</th><th>Function</th></tr>
<tr><td>UP43</td><td>Decimal point position of display</td><td>None</td><td>0 ~ 7</td><td>0</td><td>Specify the position of decimal point of the external display (DPA–80).
=0: Without decimal point
=1: 1st digit
=2: 2nd digit
=3: 7th digit
This function is effective only for the machine speed, machine coordinate current value and machine coordinate command value.
The decimal point is predetermined at the 2nd digit for the motor current and motor phase.
No decimal point is shown on the display/operation unit.</td></tr>
<tr><td>UP44</td><td>Sequence input reversal</td><td>None</td><td>000 ~ 1FE</td><td>000</td><td>Specify the logical inversion of sequence input in hexadecimal notation. Set each bit to “0” for non-inversion and “1” for inversion.
INO (PON input) cannot be inversed in other than the T series compatible sequence.
<table>
<tr><td>Input address</td><td>IN7, IN6, IN5, IN4</td><td>IN3, IN2, IN1, IN0</td></tr>
<tr><td>Logical inversion</td><td>1/0, 1/0, 1/0, 1/0</td><td>1/0, 1/0, 1/0, 0</td></tr>
<tr><td>Hexadecimal</td><td>0 ~ F</td><td>0 ~ E</td></tr>
</table>
[0: Non-inversion]
[1: Inversion]</td></tr>
<tr><td>UP47</td><td>In-position timer</td><td>1 ms</td><td>0 ~ 2000</td><td>20</td><td>Specify the minimum ON time of the in-position signal (i.e., OFF delay time).</td></tr>
<tr><td>UP48
POWER OFF</td><td>Electronic gear magnification</td><td>×1</td><td>1 ~ 100</td><td>1</td><td>This function is useful when the magnification is not enough only by setting of electronic gear.
The magnification setting function is provided because the sensor split count is expected to become unusually large, compared with the external command pulse frequency.</td></tr>
</table>

Symbol	Name	Unit	Setting range	Factory-setting	Function
UP49	VMOUT output selection	None	0000 ~ 1399	0000	Specify the output data and type of analog output A. ®®®® – Output data of VMOUT =00: Detection speed (filter output) =01: Detection current (filter output) =02: Present value (after processing of electronic gear) =03: Present value (sensor pulse) =04: Deviation (after processing of electronic gear) =05: Deviation (sensor pulse) =06: Speed command =07: Current command =08: Position command (speed command conversion value) =09: Motor phase =10: Detection speed (without filter) =11: Detection current (without filter) =12: BL value =13: OL value =14: RL value =15: Fin temperature =16: Speed deviation =17: Current deviation Type of output =0: Non-reversed output =1: Reversed output =2: Absolute value output =3: Non-reversed output without clamp Selection of function =0: X-series amplifier standard function =1: User data (Any analog value can be output by Q*©©SBA.)

Symbol	Name	Unit	Setting range	Factory-setting	Function
UP50	VMOUT output scale	0.1	0.1 ~ 3276.7	300.0	Specify the output scale of analog output A. (Ex.) To set 2 A per 1 V of monitor output voltage, specify “2.0”. (2.0 A/1 V) Scales can be set in the following ranges for each data type. Speed: 0.1 ~ 3276.7 rpm/V Current: 0.1 ~ 3276.7 A/V Pulse: 0.1 ~ 3276.7 P/V Voltage: 0.1 ~ 3276.7 V/V Angle: 0.1 ~ 3276.7 deg/V Percentage: 0.1 ~ 3276.7 %/V Temperature: 0.1 ~ 3276.7 °C/V User data: 0.1 ~ 3276.7 /V
UP51	AMOUT output selection	None	0000 ~ 1399	0001	Specify the output data and type of analog output B. The details are the same as UP49. (User data: Q*©©SBB)
UP52	AMOUT output scale	0.1	0.1 ~ 3276.7	5.0	Specify the output scale of analog output B. The details are the same as UP50.
UP53	Numerator of electronic gear for full-closed control	1 pulse	0 ~ 65535	1	This parameter should be specified when the full-closed control function is used. Specify the number of pulses corresponding to NC parameter NP005 (programming resolution) of NCBOY in terms of weight of feedback pulses from the linear sensor. When NP005 = 0.001 and the programming resolution of the external linear sensor is 0.001 [mm], for instance, specify “UP53 = 1” and “UP54 = 1”. Likewise, when NP005 = 0.001 and the programming resolution of the external linear sensor is 0.0005 [mm], specify “UP53 = 2” and “UP54 = 1”.
UP54	Denominator of electronic gear for full-closed control	1 pulse	0 ~ 65535	1	
UP55 POWER OFF	Setting of VLBus–V operation check	None	0 ~ 3	0	Used for examining the VLBus–V operating state. Specify zero (0) normally. The operating state can be checked, using AL28 (link error generation check). =0: Standard setting =1: Operation check high level (for maintenance) =2: Operation check mid level (for maintenance) =3: Operation check low level (for maintenance)

<table>
<tr><th>Symbol</th><th>Name</th><th>Unit</th><th>Setting range</th><th>Factory-setting</th><th>Function</th></tr>
<tr><td>UP56
POWER OFF</td><td>Setting of rotation coordinate system (upper digit)</td><td>1 pulse</td><td>0 ~ 9999</td><td>0</td><td rowspan="2">Specify the one (1) full turn amount when the amplifier is used in the rotation coordinate system. To use it in the linear coordinate system, specify zero (0).
Unless the rotation coordinate system is set when the machine system continues revolving in the same direction permanently, an alarm of “command value counter over” will generate.

Also, for the absolute positioning in the rotation coordinate system, the positioning direction is determined by the content of the Q*©©REVC register.

REVC =0: Shortcut
=1: Always “+” direction
=2: Always “–“ direction</td></tr>
<tr><td>UP57
POWER OFF</td><td>Setting of rotation coordinate system (lower digit)</td><td>1 pulse</td><td>0 ~ 9999</td><td>0</td></tr>
<tr><td>UP58
POWER OFF</td><td>LS function selection</td><td>None</td><td>000 ~ 233</td><td>000</td><td>Select the input method of limit inputs (HLLS, LOTP, LOTM, SKIP1 ~ 4) and brake to be used.

Digit of 1: Limit input selection
<table>
<tr><th></th><th>IN1</th><th>IN2</th><th>IN3</th><th>IN6</th><th>IN7</th></tr>
<tr><td>®®0</td><td>General</td><td>General</td><td>General</td><td>General</td><td>General</td></tr>
<tr><td>®®1</td><td>SKIP1</td><td>LOTM</td><td>LOTP</td><td>HLLS</td><td>General</td></tr>
<tr><td>®®2</td><td>SKIP1</td><td>SKIP2</td><td>SKIP3</td><td>SKIP4</td><td>General</td></tr>
<tr><td>®®3</td><td>SKIP1</td><td>LOTM</td><td>LOTP</td><td>HLLS</td><td>SKIP2</td></tr>
</table>
Digit of 10: Brake selection
<table>
<tr><th></th><th>IN4</th><th>IN5</th><th>OUT0</th><th>OUT1</th></tr>
<tr><td>®0®</td><td>General</td><td>General</td><td>General</td><td>General</td></tr>
<tr><td>®1®</td><td>DBI</td><td>General</td><td>General</td><td>DBO</td></tr>
<tr><td>®2®</td><td>General</td><td>MBI</td><td>MBO</td><td>General</td></tr>
<tr><td>®3®</td><td>DBI</td><td>MBI</td><td>MBO</td><td>DBO</td></tr>
</table>
Digit of 100: Overrun stop method
0®®: Stop in free-run state with servo-free command from NCBOY.
1®®: Sudden stop without slowdown.
2®®: Slowdown and stop.

When performing home point setting operation, select “®®1”.</td></tr>
</table>

Symbol	Name	Unit	Setting range	Factory-setting	Function
UP59 POWER OFF	Inversed selection of LS function	None	00 ~ FF	00	Specify the logical inversion of limit input when UP58 is set to ®1, ®2 or ®3. ®® – +1: – +2: Inversion of SKIP1 (1: Negative logic) +4: Inversion of LOTM or SKIP2 (1: Negative logic) +8: Inversion of LOTP or SKIP3 (1: Negative logic) +1: – +2: – +4: Inversion of HLLS or SKIP4 (1: Negative logic) +8: Inversion of SKIP2 (1: Negative logic) Ex.: When using LOTM (+4) and LOTP (+8) as the negative logic, specify “0C”. * Not inversed for general input (19**).
UP60 POWER OFF	Home point setting method	None	0 ~ 3	0	Select the home point setting method. =0: Stop at the initial motor home point after HLLS (1 → 0). =1: Stop at the initial motor home point after HLLS (0 → 1). =2: Stop with the edge of HLLS (0 → 1). =3: Stop with the edge of HLLS (1 → 0).
UP61 POWER OFF	Analog input monitor type	None	0 ~ 11	00	Select the monitor type of analog input A (REF) or B (CLI) data by a two (2)-digit number. ®® — Selection of analog input A (REF) monitor type =0: Unit of 0.01 V =1: ±12.00 V at ±32767 Selection of analog input B (CLI) monitor type =0: Unit of 0.01 V =1: ±12.00 V at ±32767
UP62 POWER OFF	Permission or prohibition of alarm 4 detection	None	0 ~ 1	0	Detection of alarm 4 can be prohibited. =0: Detection of alarm 4 is permitted. =1: Detection of alarm 4 is prohibited.
UP63	Overrun stop time	ms	0 ~ 2000	0	Specify the stop time at the time of overrun.

5.9 Special Sequence

5.9.1 Setting Special Sequence

The special sequence allows use of the I/O signals standardly assigned in each control mode by assigning another I/O signals prepared. Note, however, that IN0, OUT3 and OU4 are assigned to “main circuit ON”, “servo ready” and “servo normal”, respectively, which cannot be changed.

Type / Symbol	Special sequence 1 for mode 01	Special sequence 2 for mode 01	Special sequence 3 for mode 02	Special sequence 4 for mode 03	Special sequence 5 for mode 03	Special sequence 6 for mode 04	Special sequence 7 for mode 05	Special sequence 8 for mode 06
IN5	Current limit changeover	MB check	MB check	Current limit changeover	MB check	MB check	Speed selection 2	MB check
IN4	DB check	DB check	DB check	DB check	DB check	DB check	DB check	DB check
IN3	Zero command	Monitor changeover	Monitor changeover	Present value clear	Present value clear	Current control changeover	Sped selection 1	Pulse prohibition
IN2	Present value clear	Present value clear	Present value clear	Deviation clear	Deviation clear	Position control changeover	Forward rotation command	Forward rotation command
IN1	Home point stop	Home point stop	Limit changeover	Home point stop	Home point stop	Limit changeover	Reverse rotation command	Reverse rotation command
OUT2	Stop detection/ During home point stop	Stop detection/ During home point stop	Stop detection	In-position/ During home point stop	In-position/ During home point stop	In-position/ During home point stop	Stop detection	Stop detection
OUT1	DB output	DB output	DB output	DB output	DB output	DB output	DB output	DB output
OUT0	Warning	MB output	MB output	Warning	MB output	MB output	Warning	MB output

Type / Symbol	Special sequence 9 for mode 05	Special sequence 10 for mode 01	Special sequence 11 for mode 01	Special sequence 12 for mode 03	Special sequence 13 for mode 03	Special sequence 14 for mode 03	Special sequence 15 for mode 04	Special sequence 16 for mode 04
IN5	Current limit changeover	MB check	Zero command	MB check	Current limit changeover	Current limit changeover	Limit changeover	Present value clear
IN4	Speed selection 2	Forward rotation permit	Forward rotation permit	Zero command	Zero command	DB check	Deviation clear	Zero command
IN3	Speed selection 1	Reverse rotation permit	Reverse rotation permit	Present value clear	Present value clear	Present value clear	Current limit changeover	Limit changeover
IN2	Forward rotation command	Present value clear	Current limit changeover	Deviation clear	Deviation clear	Deviation clear	Position control changeover	Current control changeover
IN1	Reverse rotation command	Home point stop	Home point stop	Home point stop	Home point stop	Home point stop	Home point stop	Position control changeover
OUT2	Stop detection	During home point stop	Stop detection	In-position	In-position/ During home point stop	In-position/ During home point stop	Stop detection	In-position/ Stop detection
OUT1	Warning	Specified speed level	Warning	Stop detection	During home point stop	DB output	Warning	Warning
OUT0	MB output	MB output	Specified speed level	MB output	Stop detection	Stop detection	Specified speed level	During limit

Type / Symbol	Special sequence 17 for mode 01	Special sequence 18 for mode 03	Special sequence 19 for mode 01
IN5	Current limit changeover	Current limit changeover	Current limit changeover
IN4	MB check	Forward rotation permit	DB check
IN3	Zero command	Reverse rotation permit	Zero command
IN2	Present value clear	Deviation clear	Gain changeover
IN1	Home point stop	Home point stop	REF polarity changeover
OUT2	During home point stop	In-position/ During home point stop	During home point stop
OUT1	MB output	DB output	DB output
OUT0	Warning	Warning	Warning

Type / Symbol	For mode 31 (Brake not used)	For mode 31 (Dynamic brake used)	For mode 31 (Holding brake used)	For mode 31 (Dynamic brake and holding brake used)
IN7	As per UP58	As per UP58	As per UP58	As per UP58
IN6	As per UP58	As per UP58	As per UP58	As per UP58
IN5	General-purpose	General-purpose	MB check	MB check
IN4	General-purpose	DB check	General-purpose	DB check
IN3	As per UP58	As per UP58	As per UP58	As per UP58
IN2	As per UP58	As per UP58	As per UP58	As per UP58
IN1	As per UP58	As per UP58	As per UP58	As per UP58
IN0	Main circuit ON	Main circuit ON	Main circuit ON	Main circuit ON
OUT4	General-purpose	General-purpose	General-purpose	General-purpose
OUT3	General-purpose	General-purpose	General-purpose	General-purpose
OUT2	General-purpose	General-purpose	General-purpose	General-purpose
OUT1	General-purpose	DB output	General-purpose	DB output
OUT0	General-purpose	General-purpose	MB output	MB output

5.9.2 How to Use Special Sequence

Specify the special number in the above table for UP46 (sequence I/O selection), then specify the value for UP01 (control mode). When using special sequence 2 for mode 01, for instance, specify number “2” for UP46 and number “1” for UP01.
When you require a special sequence other than the combinations in the table above, consult with us.

5.9.3 Special Sequence I/O Signal

This paragraph describes only the I/O signals which are not assigned to the standard sequence.

Name	Symbol	I/O	Function
Zero command	STP	Input	During the speed command operation, the motor decelerates and stops in the position control mode. At this time, the motor receives a pulse command. In the position control mode, the motor stops, ignoring the pulse command. For the deceleration curve, UP11 (S-type acceleration/deceleration time) is effective. This function cannot be used while the motor is in the servo-free state or while the operation is executed in the current control mode.
Current limit changeover	CCD	Input	Used to change over the current limit value in other than the current control mode. When this signal is turned off, the motor maximum current is taken as the current limit value. When this signal is turned on, the changeover is done according to the limit changeover method specified by UP34.
DB check	DBIN	Input	Used to input the relay contact output (i.e., normal open contact) for the dynamic brake. This signal turns on when the dynamic brake is released and turns off when the same brake is applied. The servo amplifier is locked with the DB check ON following the DB output ON. If the dynamic brake check turns off during servo lock, AL14 will generate.
Pulse prohibition	PLDI	Input	Used in the draw control mode. When the pulse prohibition is turned on, the command pulse to the position loop is stopped compulsively. Processing of pulse input, draw value calculation, pulse output, etc. continues without stopping.
During current limit	CLA	Output	This signal turns on when the current command is limited in the speed control mode or position control mode. Applicable current limit value is determined by the current limit changeover (CCD) input state and UP34 setting (limit changeover method). If the “during current limit” turns on, extend the acceleration/deceleration time to prevent current limit.
During speed limit	SLA	Output	This signal turns on when the motor speed is limited in the current control mode. Applicable speed limit value is determined by the limit changeover (LCHG) input state and UP34 setting(limit changeover method).
During forward rotation	FOR	Output	This signal turns on when the servo motor is revolving in the forward direction at a speed exceeding the stop detection speed.
During reverse rotation	REV	Output	This signal turns on when the servo motor is revolving in the reverse direction at a speed exceeding the stop detection speed.

Name	Symbol	I/O	Function
During forward rotation prohibition	FXA	Output	This signal turns on when the forward rotation permit (FEN) is turned off. It detects a forward pulse command or forward speed command. The motor may rotate forward, therefore, by a current command or disturbance caused during normal operation.
During reverse rotation prohibition	RXA	Output	This signal turns on when the reverse rotation permit (REN) is turned off. It detects a reverse pulse command or reverse speed command. The motor may rotate reverse, therefore, by a current command or disturbance caused during normal operation.
During driving	TRQP	Output	This signal turns on when driving torque is generated with the motor speed and motor current in excess of the UP28 set value (stop detection speed) and UP40 set value (drive/absorption detection width), respectively.
During absorption	TRQM	Output	This signal turns on when absorption torque is generated with the motor speed and motor current in excess of the UP28 set value (stop detection speed) and UP40 set value (drive/absorption detection width), respectively.
During limit	LMT	Output	This signal turns on while current or speed is limited.
DB output	DBO	Output	This is the output signal for dynamic brake control. For the operation sequence, see Section 2 (Power Circuit).
Specified speed level	SAR	Output	This signal turns on when the motor speed is in the range of UP29 (specified speed level) ± UP30 (specified speed range).

Auto-Tuning	Section 6

6.1 General Descriptions on Auto-Tuning 2

6.1.1 Tuning Parameter 3

6.1.2 Filter Parameter 7

6.1.3 Tuning Flow Chart 15

6.1 General Descriptions on Auto Tuning

The auto-tuning function automatically calculates optimal values for speed and current loops in the control system by specifying a target loop gain and load inertia factor. The target loop gain is defined by the performance requirements of the machine system, The load inertia factor can be figured out at the stage of machine designing. Yet, the servo amplifier can guess a load inertia.
The auto tuning function comes in the following four (4) modes.

Standard mode	Semi-auto mode	Real-time mode	Manual mode

- The standard mode is used to adjust a servo system operation in the machine whose load inertia is known and which is rigid enough and is unlikely to cause vibration.
- The semi-auto mode is used to estimate the inertia when load inertia is unknown.
- The real-time mode is used to estimate the load inertia during operation.
- The manual mode is used to manually set in details the parameters such as loop gain and filter.

6.1.1 Tuning Parameter

Symbol	Name	Unit	Setting range	Factory-setting	Function
TP01 POWER OFF	Tuning mode	None	0 ~ 4	0	Specify the auto-tuning mode. 0: Standard mode (for setting target loop gain and load inertia) 1: Semi-auto mode (for setting inertia by executing tuning operation) 2: Real-time mode (for estimating inertia during operation) 3: Manual mode (for manually setting gain) 4: Parameter copy mode The gain for each loop automatically calculated from the target loop gains set in tuning modes 0, 1 and 2 and filter settings are the initial values for the manual mode. The initial values of the following parameters are to be changed. TP05 ~ TP14, TS21 ~ TS24, TS29 ~ TS32 Turn the power off once and on again. Then the manual mode takes effect.
TP02	Target loop gain	1 rad/s	1 ~ 1000	60	Specify a target value of position loop gain. Even when this function is used for speed control, specify this parameter as a target value of the tuning parameter. This parameter value is taken as a gain for the virtual unit
TP03	Load inertia	×0.1	0.0 ~ 200.0	1.0	Specify a value representing an amount of load inertia in terms of a multiplication to the motor inertia. This parameter needs to be set when you tune in the standard or manual mode. In the semi-auto or real-time mode, a value estimated by the servo amplifier is used for this parameter.
TP04	Semi-auto tuning	0.1 r	0.1 ~ 10.0	2.0	Specify the range of permissible rotation for the semi-auto tuning. This parameter value is displayed only when the semi-auto tuning mode is selected. Auto-tuning operation is set ready with this symbol displayed.
TP05	Speed loop gain	1 rad/s	1 ~ 6000	300	This parameter is effective in the manual mode alone, and specifies the speed loop gain for the virtual unit. In other modes, auto-tuning is effective and the gain specified in the manual mode is ignored.

Symbol	Name	Unit	Setting range	Factory-setting	Function
TP06	Speed loop integral gain	1 rad/s	0 ~ 2000	60	This parameter is effective in the manual mode alone and specifies the speed loop integral break point frequency for the virtual unit. In other modes, auto-tuning is effective and the gain specified in the manual mode is ignored.
TP07	Position A loop gain	1 rad/s	1 ~ 1000	60	This parameter is effective in the manual mode alone and specifies the position loop gain for the actual unit. In other modes, auto-tuning is effective and the gain specified in the manual mode is ignored.
TP08	Speed A loop gain	1 rad/s	1 ~ 6000	300	This parameter is effective in the manual mode alone and specifies the speed loop gain for the actual unit. In other modes, auto-tuning is effective and the gain specified in the manual mode is ignored.
TP09	Speed A loop integral gain	1 rad/s	0 ~ 2000	60	This parameter is effective in the manual mode alone and specifies the speed loop integral break point frequency for the actual unit. In other modes, auto-tuning is effective and the gain specified in the manual mode is ignored.
TP11	Position loop feed forward gain	0.001	0.000 ~ 1.000	0.000	Specify the feed forward gain of position loop. Feed forward compensation is added to the actual unit without TFC and to the virtual unit with TFC.
TP12	Speed loop feed forward gain	0.001	0.000 ~ 1.000	0.000	Specify the feed forward gain of speed loop. Feed forward compensation is added to the actual unit without TFC and to the virtual unit with TFC.
TP13	Current loop gain	1 rad/s	1 ~ 20000	3000	This parameter is effective in the manual mode alone and specifies the current loop gain. In other modes, auto-tuning is effective and the gain specified in the manual mode is ignored.
TP14	Current loop integral gain	1 rad/s	1 ~ 20000	600	This parameter is effective in the manual mode alone and specifies the current loop integral break point frequency. In other modes, auto-tuning is effective and the gain specified in the manual mode is ignored.
TP15	Gain drop during stop	0.01 %	0.00 ~ 100.00	0.00	Specify the gain drop during stop. This parameter is effective in all tuning modes. Taking the position deviation corresponding to ±90 degrees of the motor axis as 100.00 %, specify the tolerance for the position deviation at the stop. The amplifier suppresses the current until the value reaches the specified position deviation.

Symbol	Name	Unit	Setting range	Factory-setting	Function
TP15					Apart from the setting range, however, the effective range is available. It falls under the following range of angle according to the current limit value, target gain and servo motor to be used. <When TP01 is 2 or less and TFC is not used> Effective range [degrees] $= \frac{360 \times \text{Torque constant [Nm/A]} \times \text{Current limit value [A]}}{12\pi \times \text{Inertia [kgm}^2\text{]} \times \text{TP02 [rad/s]} \times \text{TP02 [rad/s]}}$ <When TP01 is 3 and TFC is used> Effective range [degrees] $= \frac{360 \times \text{Torque constant [Nm/A]} \times \text{Current limit value [A]}}{12\pi \times \text{Inertia [kgm}^2\text{]} \times \text{TP02 [rad/s]} \times \text{TP08 [rad/s]}}$
TP18 (*1)	Pulse input smoothing constant	None	0 ~ 127	0	Unless the frequency of a command pulse is stabilized in the position control mode, the pulse command can be smoothed. If the set value increases, the system controls so that the command pulse can be smoother. This function is operative when zero (0) is specified for UP11 (S-type acceleration/ deceleration time).
TP21 (*1)	Gain changeover mode	None	0 ~ 10	0	Specify the gain changeover mode in the standard or manual mode. =0: No gain changeover. =1: Changeover with “0” of external sequence (GCHG). =2: Changeover with “1” of external sequence (GCHG). =3: Changeover with speed faster than FB. =4: Changeover with speed slower than FB . =5: Changeover with value larger than speed command. =6: Changeover with value smaller than speed command. =7: Changeover with value larger than specified deviation. =8: Changeover with value smaller than specified deviation. =9: Changeover with “0” of stop detection (STA).

Symbol	Name	Unit	Setting range	Factory-setting	Function
TP21 (*1)					=10: Changeover with “1” of stop detection (STA).
TP22 (*1)	Gain changeover condition data	None	0 ~ 32767	0	Specify the changeover condition in the gain changeover mode while the standard or manual mode is selected. =0: Invalid =1: Invalid =2: Invalid =3: Changeover speed FB (r/min) =4: Changeover speed FB (r/min) =5: Changeover speed command (r/min) =6: Changeover speed command (r/min) =7: Changeover deviation (pulse) =8: Changeover deviation (pulse) =9: Invalid =10: Invalid
TP23 (*1)	Gain changeover position loop gain	0.1 %	0.0 ~ 3000.0	0.0	Specify the gain changeover position loop gain in the standard or manual mode. When “0.0” is specified, changeover is prohibited. Specify the value to the target loop gain (TP02) or position loop gain (TP07) in percentage.
TP24 (*1)	Gain changeover speed loop gain	0.1 %	0.0 ~ 3000.0	0.0	Specify the gain changeover speed loop gain in the standard or manual mode. When “0.0” is specified, changeover is prohibited. Specify the value to the speed loop gain (TP05) or speed A loop gain (TP08) in percentage.
TP25 (*1)	Gain changeover load inertia	0.1 %	0.0 ~ 3000.0	0.0	Specify the gain changeover load inertia in the standard or manual mode. When “0.0” is specified, changeover is prohibited. Specify the value to the load inertia (TP03) in percentage.
TP2 (*1)	Gain changeover speed loop integral gain	0.1 %	0.0 ~ 3000.0	0.0	Specify the gain changeover speed loop integral gain in the standard or manual mode. When “0.0” is specified, changeover is prohibited. Specify the value to the speed loop integral gain (TP06) or speed A loop integral gain (TP09) in percentage.

(*1) Use of control mode 1 to 6 is possible.

6.1.2 Filter Parameter

These parameters are typically used for suppressing resonance of the machine system.

Symbol	Name	Unit	Setting range	Factory-setting	Function
TS41 POWER OFF	Special tuning setting	None	000 ~ 123	000	Specify the use or non-use of the TFC function, and the gain factor for the actual and virtual units. This parameter can be specified in all modes. Digit of 1: Setting of TFC function 0: Non-use of TFC 1: Use of TFC 2: Non-use of TFC (without gain limiter) 3: Use of TFC (with gain limiter) Digit of 10: Gain factor of actual and virtual units 0: ×0.707 1: ×1.000 2: ×1.200 Digit of 100 Digit of 100: Special setting in standard mode (TP01 = 0) 0: Without speed integral zero setting for virtual unit 1: With speed integral zero setting for virtual unit
TS42 POWER OFF	PWM frequency setting	0.1 kHz	0.0 ~ 20.0	0.0	Specify the PWM frequency. 0.0: Standard frequency (internal setting) Only the value of 2.6 to 20.0 kHz are valid. DO NOT specify a value of 2.5 kHz or less. (When you wish to use this function, consult us separately.)
TS43	Setting of speed feedback smoothing filter	None	0 ~ 3	0	Specify the smoothing filter for speed feedback. 0: Use of filter setting by motor code setting 1: Without smoothing filter 2: 2-stage smoothing filter 3: 4-stage smoothing filter
TS44	Speed feed forward LPF frequency	1 rad/s	1 ~ 20000	5000	Specify the frequency of the speed feed forward primary low-pass filter.

Symbol	Name	Unit	Setting range	Factory-setting	Function
TS45	Speed monitor LPF frequency	1 rad/s	1 ~ 20000	5000	Specify the frequency of the speed monitor primary low-pass filter.
TS51	Type of speed command IIR filter	None	0 ~ 6	0	Select the type of the filter. Setting is possible in all modes. 0: Without filter 1: Primary filter 2: Secondary filter 3: Phase compensation filter 4: Notch filter (with depth setting) 5: ωl/ωm filter 6: Notch filter
TS52	Damping factor of speed command IIR filter	0.001	0.001 ~ 2.000	1.000	Specify the damping factor when the secondary, notch or ωl/ωm filter is selected. This setting is ineffective for other filters.
TS53	Speed command IIR filter ω1	1 rad/s	1 ~ 20000	20000	Specify the filter frequency when the primary, secondary, notch or ωl/ωm filter is selected. For the phase compensation filter, specify the phase lag frequency.
TS54	Speed command IIR filter ω2	1 rad/s	1 ~ 20000	20000	Specify the phase lead frequency for the phase compensation filter. This setting is ineffective for other filters.
TS55	Depth of speed command IIR filter	1 dB	0 ~ 100	0	Specify the gain at center frequency of the notch filter. The value thus set is used as a minus data. Ex.) When the set value is 10, for instance, the gain at center frequency is –10 dB. ”0 dB” signifies the notch filter with infinity depth.
TS56	Type of speed feedback IIR filter	None	0 ~ 6	0	Select the type of the filter. Select either one of the following six (6) types in the manual mode alone. In other modes, a primary filter is set by auto-tuning and the filer specified in the manual mode is neglected. 0: Without filter 1: Primary filter 2: Secondary filter 3: Phase compensation filter 4: Notch filter (with depth setting) 5: ωl/ωm filter 6: Notch filter

Symbol	Name	Unit	Setting range	Factory-setting	Function
TS57	Damping factor of speed feedback IIR filter	0.001	0.001 ~ 2.000	1.000	Specify the damping factor when the secondary, notch or ωl/ωm filter is selected. This setting is ineffective for other filters.
TS58	Speed speedback IIR filter ω1	1 rad/s	1 ~ 20000	20000	Specify the filter frequency when the primary, secondary, notch or ωl/ωm filter is selected. For the phase compensation filter, specify the phase lag frequency.
TS59	Speed feedback IIR filter ω2	1 rad/s	1 ~ 20000	20000	Specify the phase lead frequency for the phase compensation filter. This setting is ineffective for other filters.
TS60	Depth of speed feedback IIR filter	1 dB	0 ~ 100	0	Specify the gain at center frequency of the notch filter. The value thus set is used as a minus data. Ex.) When the set value is 10, for instance, the gain at center frequency is –10 dB. ”0 dB” signifies the notch filter with infinity depth.
TS61	Type of current command 0 IIR filter	None	0 ~ 6	0	Select the type of the filter. Select either one of the following six (6) types in the manual mode alone. In other modes, a primary filter is set by auto-tuning and the filer specified in the manual mode is neglected. 0: Without filter 1: Primary filter 2: Secondary filter 3: Phase compensation filter 4: Notch filter (with depth setting) 5: ωl/ωm filter 6: Notch filter
TS62	Damping factor of current command 0 IIR filter	0.001	0.001 ~ 2.000	1.000	Specify the damping factor when the secondary, notch or ωl/ωm filter is selected. This setting is ineffective for other filters.
TS63	Current command 0 IIR filter ω1	1 rad/s	1 ~ 20000	20000	Specify the filter frequency when the primary, secondary, notch or ωl/ωm filter is selected. For the phase compensation filter, specify the phase lag frequency.
TS64	Current command 0 IIR filter ω2	1 rad/s	1 ~ 20000	20000	Specify the phase lead frequency for the phase compensation filter. This setting is ineffective for other filters.

Symbol	Name	Unit	Setting range	Factory-setting	Function
TS65	Depth of current command 0 IIR filter	1 dB	0 ~ 100	0	Specify the gain at center frequency of the notch filter. The value thus set is used as a minus data. Ex.) When the set value is 10, for instance, the gain at center frequency is –10 dB. ”0 dB” signifies the notch filter with infinity depth.
TS66	Type of current command 1 IIR filter	None	0 ~ 6	0	The filter types are the same as TS61. Setting is possible in all modes.
TS67	Damping factor of current command 1 IIR filter	0.001	0.001 ~ 2.000	1.000	This parameter is the same as TS62.
TS68	Current command 1 IIR filter ω1	1 rad/s	1 ~ 20000	20000	This parameter is the same as TS63.
TS69	Current command 1 IIR filter ω2	1 rad/s	1 ~ 20000	20000	This parameter is the same as TS64.
TS70	Depth of current command 1 IIR filter	1 dB	0 ~ 100	0	This parameter is the same as TS65.
TS71	Type of current command 2 IIR filter	None	0 ~ 6	0	The filter types are the same as TS61. Setting is possible in all modes.
TS72	Damping factor of current command 2 IIR filter	0.001	0.001 ~ 2.000	1.000	This parameter is the same as TS62.
TS73	Current command 2 IIR filter ω1	1 rad/s	1 ~ 20000	20000	This parameter is the same as TS63.
TS74	Current command 2 IIR filter ω2	1 rad/s	1 ~ 20000	20000	This parameter is the same as TS64.
TS75	Depth of current command 2 IIR filter	1 dB	0 ~ 100	0	This parameter is the same as TS65.

Symbol	Name	Unit	Setting range	Factory-setting	Function
TS76	Type of current command 3 IIR filter	None	0 ~ 6	0	The filter types are the same as TS61. Setting is possible in all modes.
TS77	Damping factor of current command 3 IIR filter	0.001	0.001 ~ 2.000	1.000	This parameter is the same as TS62.
TS78	Current command 3 IIR filter ω1	1 rad/s	1 ~ 20000	20000	This parameter is the same as TS63.
TS79	Current command 3 IIR filter ω2	1 rad/s	1 ~ 20000	20000	This parameter is the same as TS64.
TS80	Depth of current command 3 IIR filter	1 dB	0 ~ 100	0	This parameter is the same as TS65.
TS81	Type of current command 4 IIR filter	None	0 ~ 6	0	The filter types are the same as TS61. Setting is possible in all modes.
TS82	Damping factor of current command 4 IIR filter	0.001	0.001 ~ 2.000	1.000	This parameter is the same as TS62.
TS83	Current command 4 IIR filter ω1	1 rad/s	1 ~ 20000	20000	This parameter is the same as TS63.
TS84	Current command 4 IIR filter ω2	1 rad/s	1 ~ 20000	20000	This parameter is the same as TS64.
TS85	Depth of current command 4 IIR filter	1 dB	0 ~ 100	0	This parameter is the same as TS65.
TS86	Type of current command 5 IIR filter	None	0 ~ 6	0	The filter types are the same as TS61. Setting is possible in all modes.

Symbol	Name	Unit	Setting range	Factory-setting	Function
TS87	Damping factor of current command 5 IIR filter	0.001	0.001 ~ 2.000	1.000	This parameter is the same as TS62.
TS88	Current command 5 IIR filter ω1	1 rad/s	1 ~ 20000	20000	This parameter is the same as TS63.
TS89	Current command 5 IIR filter ω2	1 rad/s	1 ~ 20000	20000	This parameter is the same as TS64.
TS90	Depth of current command 5 IIR filter	1 dB	0 ~ 100	0	This parameter is the same as TS65.
TS91	Type of current command 6 IIR filter	None	0 ~ 6	0	The filter types are the same as TS61. Setting is possible in all modes.
TS92	Damping factor of current command 6 IIR filter	0.001	0.001 ~ 2.000	1.000	This parameter is the same as TS62.
TS93	Current command 6 IIR filter ω1	1 rad/s	1 ~ 20000	20000	This parameter is the same as TS63.
TS94	Current command 6 IIR filter ω2	1 rad/s	1 ~ 20000	20000	This parameter is the same as TS64.
TS95	Depth of current command 6 IIR filter	1 dB	0 ~ 100	0	This parameter is the same as TS65.
TS96	Type of current command 7 IIR filter	None	0 ~ 6	0	The filter types are the same as TS61. Setting is possible in all modes.
TS97	Damping factor of current command 7 IIR filter	0.001	0.001 ~ 2.000	1.000	This parameter is the same as TS62.

Symbol	Name	Unit	Setting range	Factory-setting	Function
TS98	Current command 7 IIR filter ω1	1 rad/s	1 ~ 20000	20000	This parameter is the same as TS63.
TS99	Current command 7 IIR filter ω2	1 rad/s	1 ~ 20000	20000	This parameter is the same as TS64.
TS100	Depth of current command 7 IIR filter	1 dB	0 ~ 100	0	This parameter is the same as TS65.
TS101	Type of current command 8 IIR filter	None	0 ~ 6	0	The filter types are the same as TS61. Setting is possible in all modes.
TS102	Damping factor of current command 8 IIR filter	0.001	0.001 ~ 2.000	1.000	This parameter is the same as TS62.
TS103	Current command 8 IIR filter ω1	1 rad/s	1 ~ 20000	20000	This parameter is the same as TS63.
TS104	Current command 8 IIR filter ω2	1 rad/s	1 ~ 20000	20000	This parameter is the same as TS64.
TS105	Depth of current command 8 IIR filter	1 dB	0 ~ 100	0	This parameter is the same as TS65.
TS106	Type of current command 9 IIR filter	None	0 ~ 6	0	The filter types are the same as TS61. Setting is possible in all modes.
TS107	Damping factor of current command 9 IIR filter	0.001	0.001 ~ 2.000	1.000	This parameter is the same as TS62.
TS108	Current command 9 IIR filter ω1	1 rad/s	1 ~ 20000	20000	This parameter is the same as TS63.
TS109	Current command 9 IIR filter ω2	1 rad/s	1 ~ 20000	20000	This parameter is the same as TS64.

Symbol	Name	Unit	Setting range	Factory-setting	Function
TS110	Depth of current command 9 IIR filter	1 dB	0 ~ 100	0	This parameter is the same as TS65.
TS143	Observer selection	None	0 ~ 1	0	Specify the type of the observer only when the standard or manual mode is selected by TP01, “without gain changeover” is selected by TP21 and “non-use of TFC” or “non-use of TFC without limiter” is selected by TS41. Also, the observer can be used in the position control mode.
TS144	Observer gain	×0.01	0.01 ~ 100.00	1.00	Specify the observer gain. This value should be an adjustment value to the reference gain.
TS145	Observer damping factor	0.001	0.001 ~ 2.000	0.300	Specify the observer damping factor.
TS146	Observer ωr	1 rad/s	6 ~ 1256	62	Specify the observer resonance frequency.
TS147	Observer ωl	1 rad/s	6 ~ 628	62	Specify the observer anti-resonance frequency.

6.1.3 Tuning Flow Chart

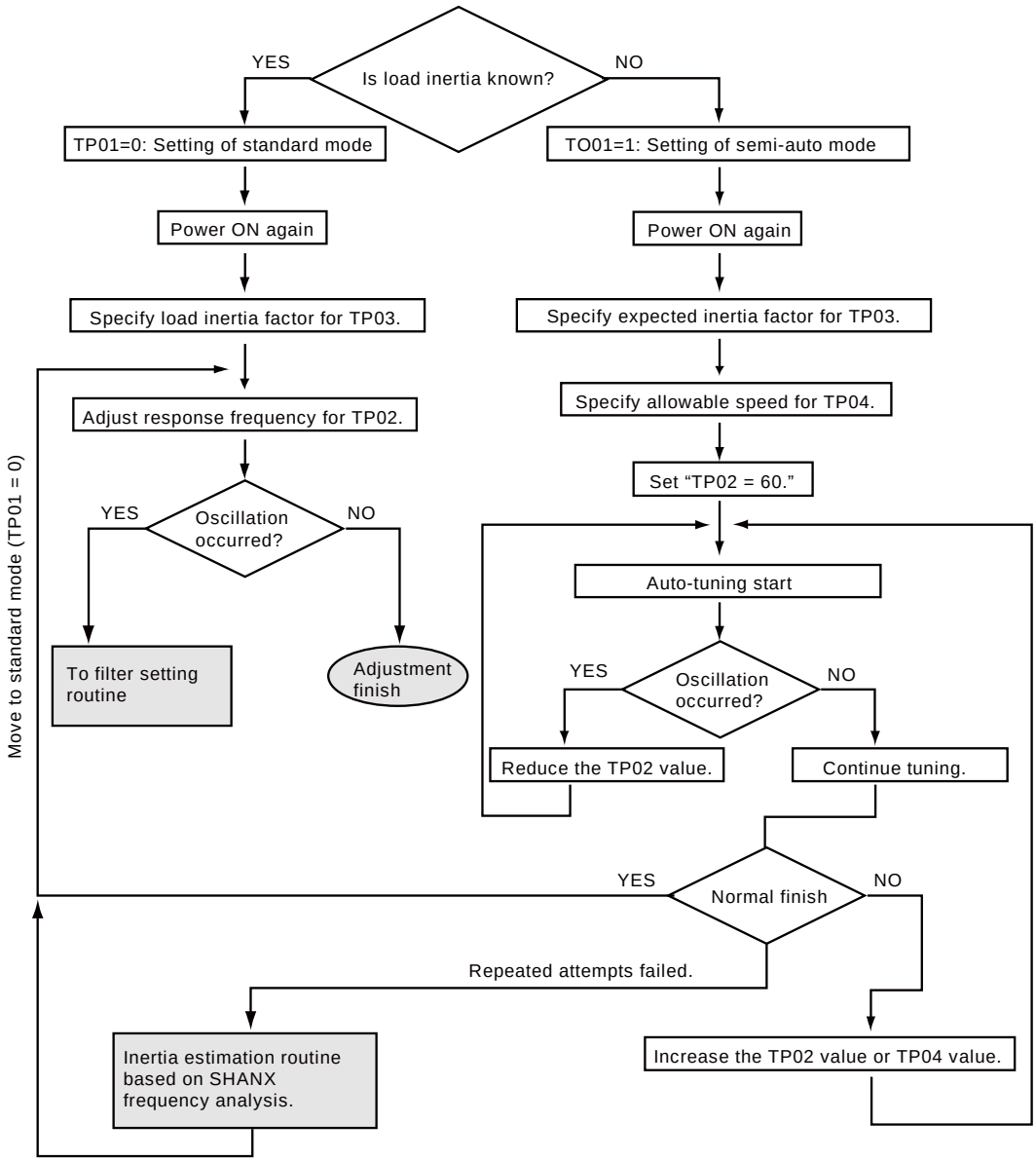

- Gain adjustment methods

  In the standard mode, other parameters are automatically calculated based on the TP02 set value. In the manual mode, increase or decrease gains while maintaining these relationships.

No.	Name	Calculation method
TP02	Target loop gain	Specify manually.
TP03	Load inertia factor	Specify in various manners.
TP07	Position loop gain	TP07 = TP02
TP08	Speed loop gain	TP08 = TP02 × 6
TP09	Speed loop integral gain	TP09 = TP02
TS56	Speed FB filter selection	Specify “1” in the standard mode (primary LDP).
TS58	Speed FB filter ω1	TS58 = TP02 × 6 × 12

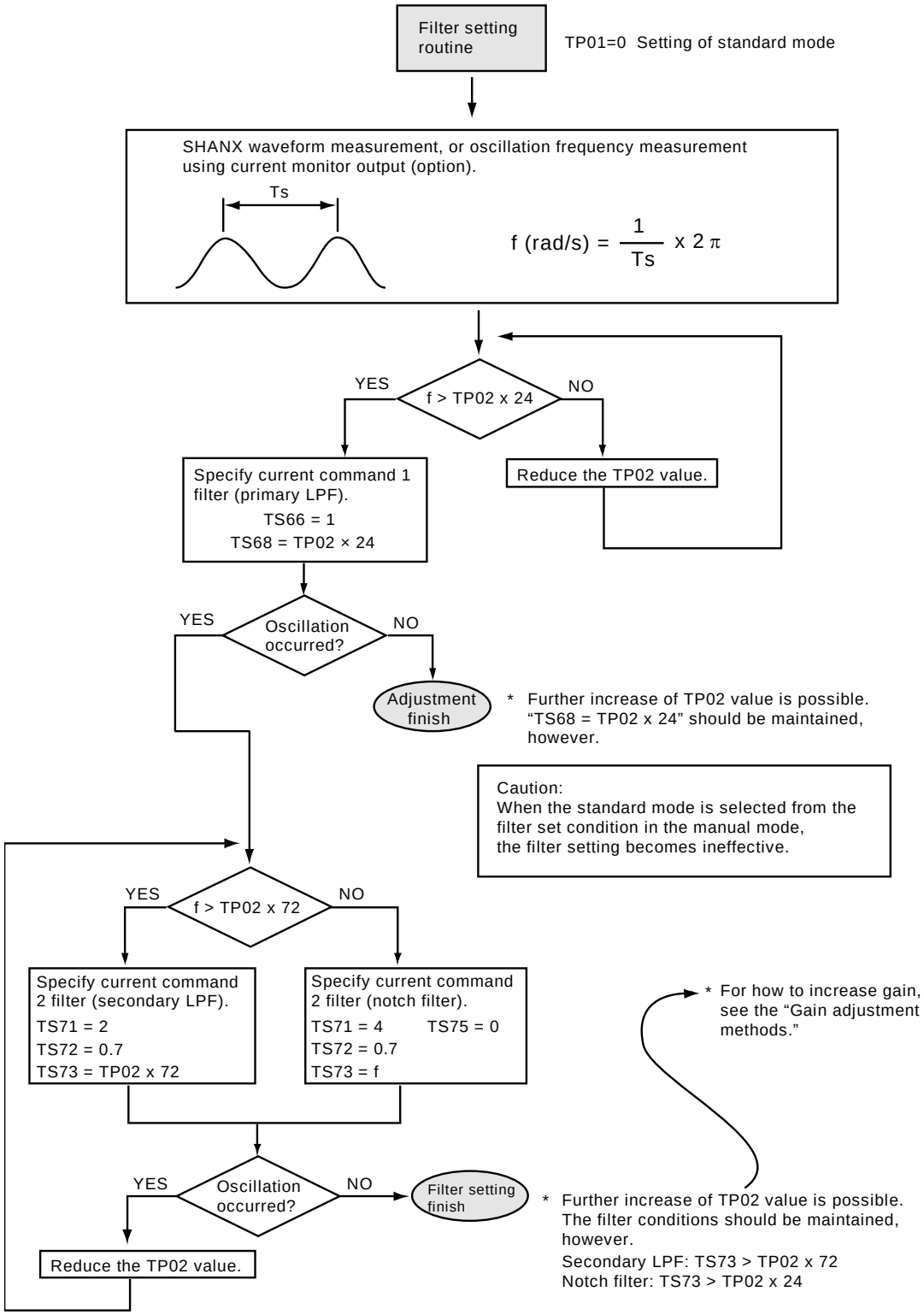
Filter setting routine
TP01=0 Setting of standard mode
SHANX waveform measurement, or oscillation frequency measurement using current monitor output (option).
Ts
f (rad/s) = 1/Ts x 2π
YES
f > TP02 x 24
NO
Specify current command 1 filter (primary LPF).
TS66 = 1
TS68 = TP02 × 24
Reduce the TP02 value.
YES
Oscillation occurred?
NO
Adjustment finish
* Further increase of TP02 value is possible. "TS68 = TP02 x 24" should be maintained, however.
Caution:
When the standard mode is selected from the filter set condition in the manual mode, the filter setting becomes ineffective.
YES
f > TP02 x 72
NO
Specify current command 2 filter (secondary LPF).
TS71 = 2
TS72 = 0.7
TS73 = TP02 x 72
Specify current command 2 filter (notch filter).
TS71 = 4 TS75 = 0
TS72 = 0.7
TS73 = f
* For how to increase gain, see the "Gain adjustment methods."
YES
Oscillation occurred?
NO
Filter setting finish
* Further increase of TP02 value is possible. The filter conditions should be maintained, however.
Secondary LPF: TS73 > TP02 x 72
Notch filter: TS73 > TP02 x 24
Reduce the TP02 value.

- Inertia estimation method by SHANX frequency analysis

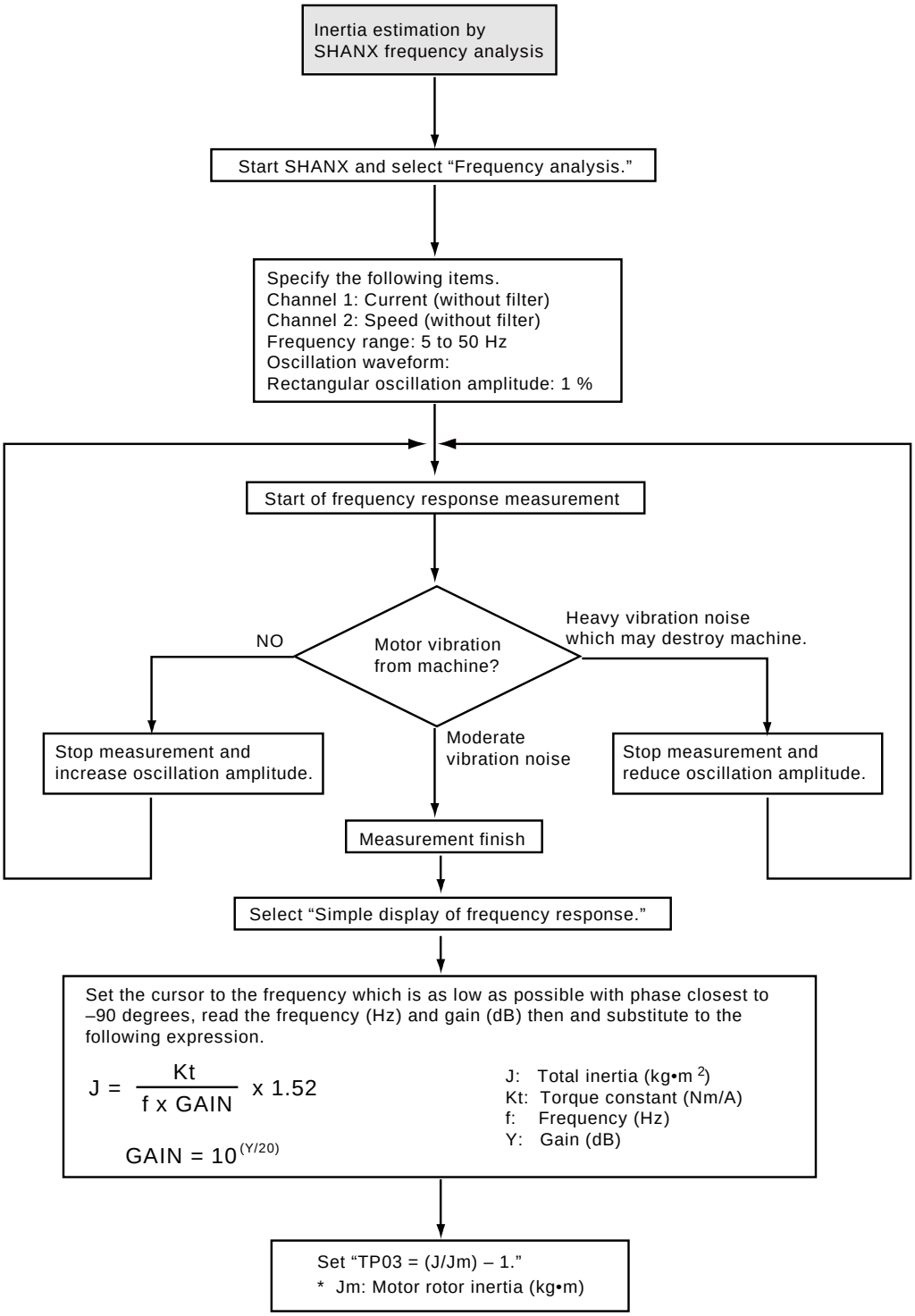

SHANX Frequency analysis window

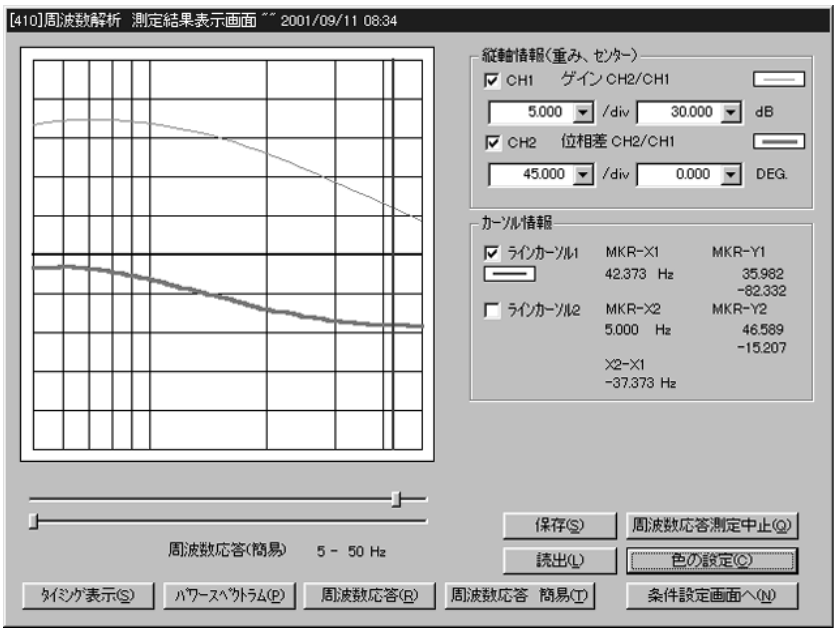

The above figure shows that as the frequency rises, the phase value is getting closer to –90°. Set the cursor to 42 Hz where the phase is relatively close to –90° and read the gain 36.0 dB. Substitute the value to the expression and obtain the load inertia factor (TP03).

$$\text{GAIN} = 10^{(36.0/20)} = 63.1$$

$$J = \frac{0.55}{42 \times 63.1} \times 1.52 = 3.15 \times 10^{-4}\ (\text{kg}\cdot\text{m}^2)$$

$$\text{TP03} = (3.15 \times 10^{-4} / 0.98 \times 10^{-4}) - 1 = 2.2\ (\text{times}) \qquad *1$$

If a frequency whose phase is remote from –90°, an error will increase.

(*1) For VLBSV–ZA06030 [rotor inertia 0.98×10^{-4} (kg·m^2)]

Absolute Position Detection System (ABS)	Section 7

7.1 Configuration 3

7.2 Specifications 5

7.3 Wiring 8

7.4 Output Timing 9

7.5 Parameter Setting 10

7.6 How to Clear ABS Value (Present Value) 12

7.7 Replacement of ABS Batteries for Maintaining Absolute Position 13

7.8 Usage Examples of Resolver Multi-Turn ABS 15

When a resolver is used as the motor sensor, a resolver multi-turn ABS can be used, which allows building up of an ABS system by using a standard motor.
Also, a 17-bit serial ABS encoder is standardly provided for the encoder specification.
To use the ABS function, ABS batteries (LRV03/BTT06) are required, respectively.

(1) Multi-turn absolute position detection
Maximum rotation counts when a resolver multi-turn ABS is used: $\pm(2^{14}-1)$
Maximum rotation counts when a 17-bit serial ABS encoder is used: $\pm(2^{12}-1)$

(2) Present value setting method
Select to clear all present values or only rotation counts (for resolver multi-turn ABS only).

(3) Protective function
ABS sensor check, battery voltage check, or battery cable check during power OFF.

(4) Wiring
Three (3) signals are available to output 32-bit present values.

7.1 Configuration

[Resolver multi-turn ABS]

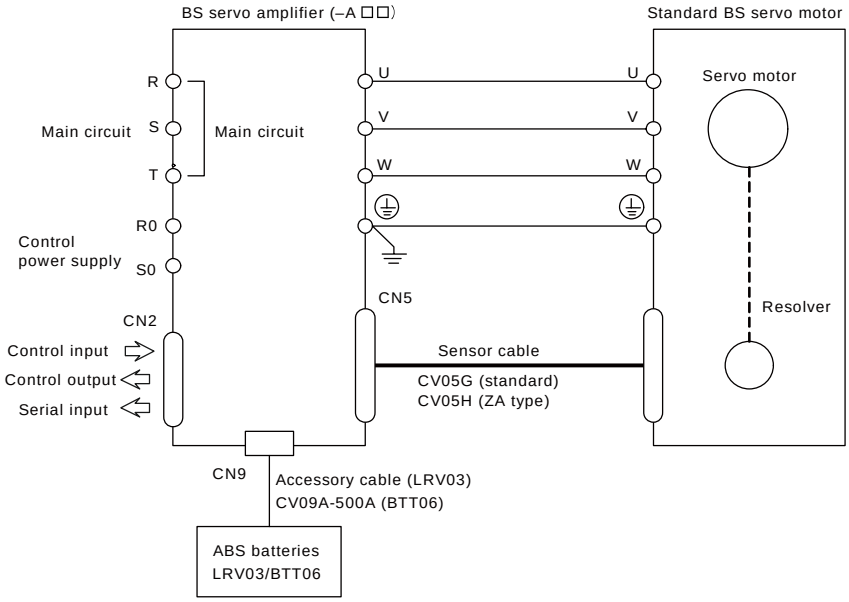

Configuration table

Name	Model	Remarks
BS servo motor	VLBSV–©©©©©	V series standard motor
	VLBSV–ZA©©©©©	V series ZA type motor
BS servo amplifier	VLASX–©©©P©–A©©	Resolver multi-turn ABS compatible amplifier
ABS battery	LRV03	4.5 V, with 50 cm-long cable
	BTT06	3.6 V Cable (CV09A–500A, 50 cm) provided optionally.
Sensor cable	CV05G–©©©A	Compatible with standard motor (max. 120 m).
	CV05H–©©©A	Compatible with ZA type motor (max. 120 m).

[17-bit serial encoder]

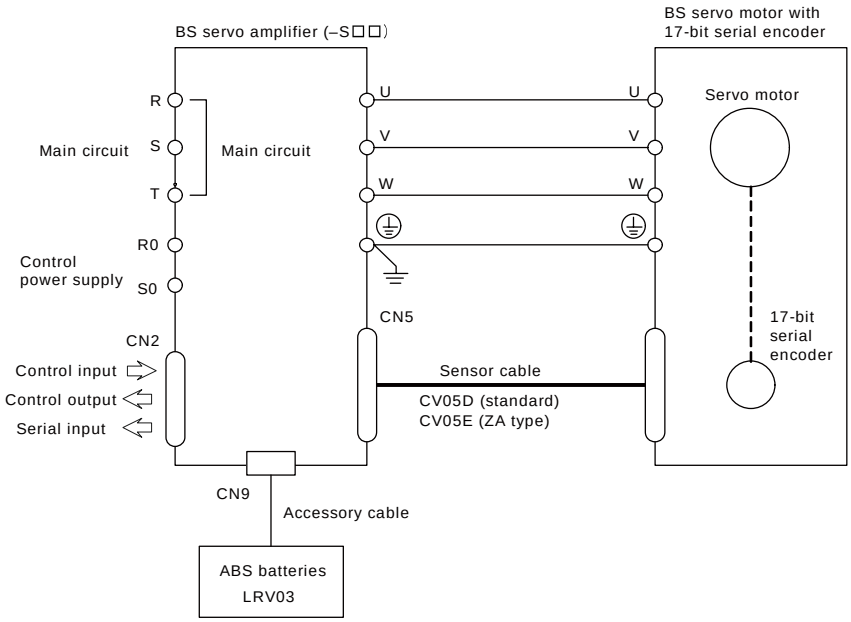

Configuration table

Name	Model	Remarks
BS servo motor	VLBSV–©©©©©–S1	V series standard motor with 17-bit serial encoder
	VLBSV–ZA©©©©©–S1	ZA type motor with 17-bit serial encoder
BS servo amplifier	VLASX–©©©P©–S©©	17-bit serial ABS compatible amplifier
ABS battery	LRV03	4.5 V, with 50 cm-long cable
Sensor cable	CV05D–©©©A	Compatible with standard motor (max. 30 m).
	CV05E–©©©A	Compatible with ZA type motor (max. 30 m).

7.2 Specifications

Resolver specifications

	Resolver multi-turn ABS system
Type	Resolver pulse excitation type with battery backup.
Amplifier model	VLASX–©©©P©–A©©
Applicable motor	VLBSV–***** (V series standard motor: ZA types)
Cable type	CV05G (standard type), CV05H (ZA types)
Max. cable length	120 m
Max. counts of rotation	Counter 15-bit $\pm(2^{14}-1)$
Max. rotation speed at power OFF	6,000 min^{-1}
Max. rotation speed during power failure timer ON	6,000 min^{-1} (The power failure timer works for six (6) seconds.) (Note 2)
Max. rotation speed at power failure	1,000 min^{-1}
Max. rotation speed at power ON	1,000 min^{-1}
Battery life (Note 1)	LRV03 AA alkaline battery 4.5 V: 1.5 years
	BTT06 AA lithium battery 3.6 V: 4 years (Note 3)
Parameter setting	Set “UP12 = ©1©” to select the ABS mode.
Protective function (Note 5)	AL06: Resolver cable disconnection AL13: Resolver ABS battery voltage drop AL19: Resolver phase error AL22: Resolver ABS phase error AL23: Resolver ABS cable disconnection AL24: Resolver ABS battery alarm AL32: Zero point unsaved error AL33: Resolver ABS invalid zero point AL36: Resolver ABS battery cable disconnection
	AL20: Overspeed
Data output	Selection of four (4) serial output types by parameter UP18.
Home point setting	Home setting operation or manual setting through keyboard.
Operation at instantaneous power failure	(Note 4)

Encoder specifications

	17-bit serial ABS encoder system
Type	17-bit serial ABS encoder with battery backup.
Amplifier model	VLASX–©©©P©–S©©
Applicable motor	VLBSV–*****–S1 (BS servo motor with 17-bit serial ABS encoder)
Cable type	CV05D (standard type), CV05E (Z type)
Max. cable length	30 m
Max. counts of rotation	Counter 13-bit $\pm(2^{12}-1)$
Max. rotation speed at power OFF	6,000 min^{-1}
Battery life (Note 1)	LRV03 AA alkaline battery 4.5 V: 3 years
Parameter setting	Set “UP12 = ©1©” to select the ABS mode.
Protective function (Note 5)	AL40: Encoder cable disconnection AL41: Encoder communication error AL42: Encoder backup error AL44: Encoder battery alarm AL45: Encoder ABS phase error AL46: Encoder overspeed
Data output	Selection of four (4) serial output types by parameter UP18.
Home point setting	Home setting operation or manual setting through keyboard.
Operation at instantaneous power failure	(Note 4)

Note 1: The battery life in the above table is based a cycle of on 12-hour excitation and 12-hour non-excitation (i.e., motor stop).
When the batteries are left unattended during power OFF, their life will be half the above values (at the temperature of 20°C).
Under other operating conditions, the battery life may shorten.

Note 2: When the power supply is disconnected due to an emergency, speed reduction to 1,000 min^{-1} is required in six (6) seconds. Unless this is possible, integrate a dynamic brake in the circuit.

Note 3: For BTT06, batteries alone cannot be replaced. The whole BTT06 unit should be replaced.

Note 4:
- Power failure for 10 ms or less:
  Operation is continued.

- Power failure exceeding 10 ms:
  Operation is stopped after power failure detection (max. 50 ms).
  Restart after checking for the power OFF.
  Even if the power supply is recovered before the power OFF, operation cannot be continued. According to the operating conditions, other alarms such as PN voltage drop due to power OFF may be detected.

Note 5: Even if a home point unsaved error is generated (i.e., at AL32 detection), operation becomes possible by reset, etc., and positioning operation such as automatic operation can be done also. When this happens, the motor stop position at power ON becomes the start point. When such operations need to be protected at generation of a home point unsaved error, provide an external interlock.

7.3 Wiring

The following diagram shows the system with a resolver multi-turn ABS serving as the motor sensor. The diagram is common with the 17-bit serial ABS encoder specification except for sensor wiring. Absolute data are serially output from CN2. The display unit (DPA–80) cannot be used.

[Resolver multi-turn ABS system]

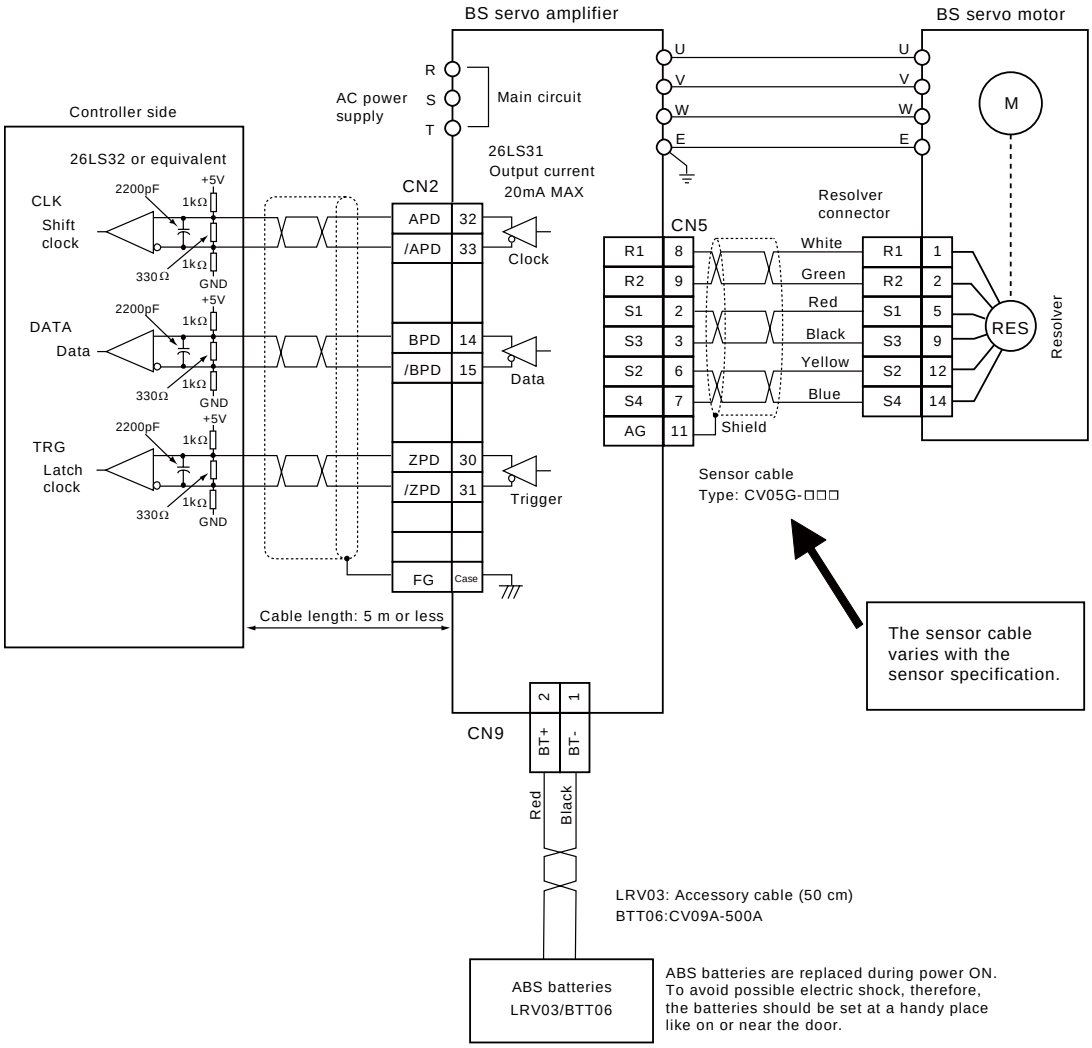

7.4 Output Timing

- Validating serial data

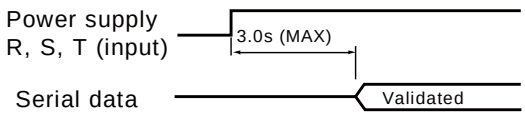

- Serial data

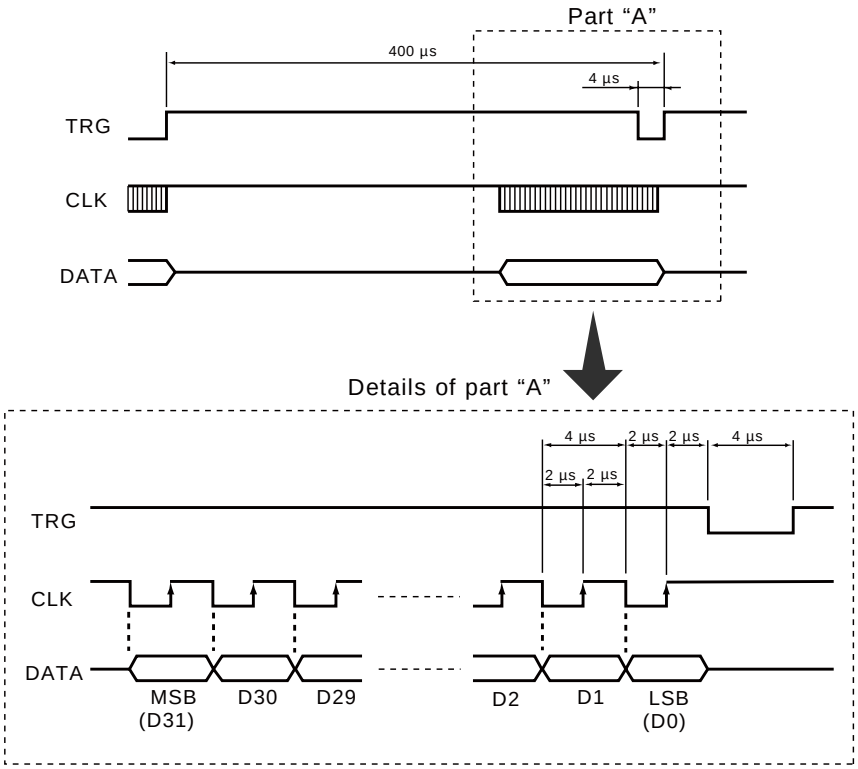

7.5 Parameter Setting

The following parameters are used for absolute position detection.

- UP03 ©©©: Resolver cable length
  Specify the resolver ABS cable length between the motor and amplifier when a resolver ABS is used. This parameter needs not be specified when an encoder is used.
- UP04 ©©©©©: Electronic gear (numerator)
- UP05 ©©©©©: Electronic gear (denominator)
  Specify the value of the electronic gear for UP04 (numerator) and UP05 (denominator) based on the number of pulses per one (1) full turn of motor.
- UP12 ©©: ABS clear mode
  This parameter has the following two (2) types of clear functions for the home point setting and a function for preventing an error operation.

Set value	Function	Description
0	All clear	Clears the counts of rotation and motor home point at the start.
1	Clear of counts of rotation	Sets an absolute position during one (1) full turn of motor. Used when relocating (resolver multi-turn ABS type only)
2	Clear prohibited	Nullifies the home point setting and prevents an error operation.

- UP18 ©©©©: Differential output type
  Specify the lower two (2) digits of UP18 so that present values can be output as binary serial data.

UP18 ····· 01®®

Output selection → 2: Present value output type

		Output order								
Set value	Present value output type	FIRST	2	···	7	8	9	10	···	LAST
0	32 bits	MSB D31	D30	···	D25	D24	D23	D22	···	LSB D0
1	23 bits plus parity	x	x	···	x	x	Parity	MSB D22	···	LSB D0
2	24 bits plus parity	x	x	···	x	Parity	MSB D23	D22	···	LSB D0
3	31 bits plus parity	Parity	MSB D30	···	D25	D24	D23	D22	···	LSB D0

Serial data are output from MSB as shown in the above table. Irrespective of the setting of present value output type, 32-bit data are output, and the part marked “x” in the above table is truncated in a shift register.

7.6 How to Clear ABS Value (Present Value)

When the electronic gear setting is changed or the home point setting is cleared from the memory at the start of the machine, be sure to execute the ABS clear function.

Resolver multi-turn ABS type

Power ON

↓

Generation of AL23, AL32 — AL23: ABS cable disconnection; AL32: Home point unsaved error

↓

Reset — Press the SET key or use sequence input RSET.

↓

* Power OFF → ON — Make sure that the display is turned off, then turn the power on again.

↓

* Confirm that only AL32 is generated.

↓

* Reset — Press the SET key or use sequence input RSET.

↓

Set parameter UP12. — Set parameter UP12 to “10 (All clear).”

↓

* Power OFF → ON — Make sure that the display is turned off, then turn the power on again.

↓

Move the machine to the home point.

↓

Execute the present value clearing operation. — Keep present value clear signal PCLR for over 30 ms, or clear the present value by key operation.

<Clear of present value by key operation>

The present value can be cleared from the display/operation unit.

[Step 1] While [A] or [A'] (present value) is displayed, keep pressing the Up (®) and Down (©) keys for five (5) seconds at the same time while pressing the SEL key. Then [CLr] is displayed.

[Step 2] Press the SEL and SET keys at the same time, and the present value clearing mode takes effect with the entire display flickering.

[Step 3] Press the SET key, and the present value clearing function is executed. Once the present value has been cleared, the flickering [CLr] display stops.
Press the MODE key, and the present value clearing mode is canceled with the flickering [CLr] stopped.

[Step 4] Double-click the MODE key, and the system returns to the [A] or [A'] (present value) display.

↓

Set parameter UP12. — Set parameter UP12 (ABS clear mode) to “®12 (Clear prohibited).” Be sure to set this parameter to prevent a mis-operation.

↓

* Power OFF → ON — Make sure that the display is turned off, then turn the power on again.

↓

Home point setting finish

Serial ABS encoder type

Power ON

↓

Generation of AL42, AL32

When a step marked with * is skipped, AL33 (invalid ABS home point) is caused. (Resolver ABS type alone)

7.7 Replacement of ABS Batteries for Maintaining Absolute Position

[LRV03]

[1] Before replacing the batteries, locate the servo motor axis at the home point clear coordinate or home point preset coordinate and stop it in the servo free condition. The reason why the axis is to be located at the home point before battery change is to facilitate the operation in Step [7].

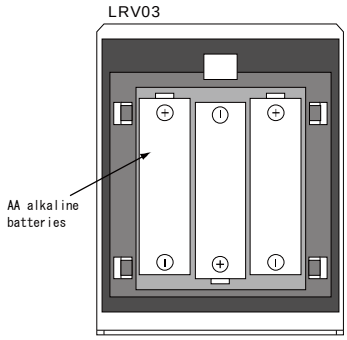

[2] Prepare three (3) AA alkaline batteries (1.5 V).

[3] Remove the ABS battery LRV03 cover while the power is turned on.

[4] Remove the existing batteries inside.

[5] Set the new AA alkaline batteries, taking careful precautions on the battery set direction.

[6] Set the LRV03 cover.

[7] Make sure that the coordinate display is the same as that before battery replacement, then turn the power off once and on again.
After the power is turned on, an alarm of AL42, AL44 or AL32 may occur according to the type of the motor sensor used and type of servo amplifier. When this happens, perform re-initialization according to the procedures described in Para. 7.6. Unless an alarm is generated, make sure that the coordinate display is identical with the display shown before power OFF. To check for the coordinate display, start an operation, rotate the servo motor about half a turn and return the axis to the home point to make judgment.

[8] Dispose of the batteries removed according to the prescribed instructions.

[BTT06] (resolver multi-turn ABS type only)

BTT06 battery unit

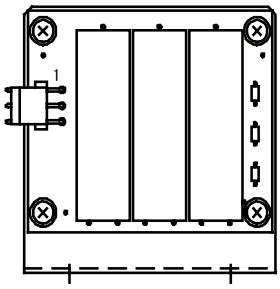

[1] Prepare a BTT06 battery unit.

[2] Disconnect the BTT06 cable while the power is turned on.

[3] Remove the existing BTT06 battery unit and set a new BTT06 battery unit.

[4] Connect the cable disconnected in Step [2] above to the new BTT06 battery unit.

[5] Dispose of the batteries removed according to the prescribed instructions.

Caution: As the power is kept ON during battery replacement, take careful precautions against an electric shock. If the batteries are replaced while the power is turned off, the ABS home point is cleared from the memory with AL32 (home point unsaved) error generated. When this happens, perform home point setting again according to the absolute home point setting procedures.

7.8 Usage Examples of Resolver Multi-Turn ABS

- Relocating the machine
  Before relocating the machine, mark the points which is ±1/4 turn from the motor home point, as shown below.

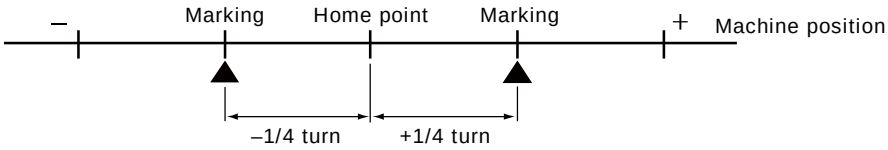

After the machine has been relocated, the home point can be restored in the following manner.

[1] Set parameter UP12 to "©11: (clear of counts of rotation)."

[2] Move the machine to the marked area.

[3] Execute the ABS clearing function.

CAUTION	The power is kept ON during ABS battery replacement. Take careful precautions against an electric shock.

Peripheral Equipment	Section 8

8.1 External Display Unit (DPA–80) 4
8.2 Brake Power Supply 4
8.3 ABS Batteries for Maintaining Absolute Position (LRV03) 5
8.4 ABS Battery for Maintaining Absolute Position (BTT06) 6
8.5 External Reverse-Current Absorption Resistor 6
8.6 Noise Filter (TDK-Make) 7
8.7 ACL/DCL 9
8.8 RS232C Conversion Connector (CV01C) 11
8.9 I/O Signal Cable (CV02C) 12
8.10 Standard Serial ABS Cable (CV05D) 13
8.11 ZA Motor Serial ABS Cable (CV05E) 15
8.12 Standard Resolver Cable (CV05G) 17
8.13 ZA Motor Resolver Cable (CV05H) 19
8.14 Single Phase Power Cable (CV06A) 21
8.15 Three (3)-Phase Power Cable (CV06B) 22
8.16 Internal Reverse-Current Absorption Resistor/MC Cable (CV07A) 23
8.17 External Reverse-Current Absorption Resistor/MC Cable (CV07B) 23
8.18 ZA Motor Armature Cable (CV08A) 24
8.19 Armature Cable for ZA Motor with Brake (CV08B) 26
8.20 Standard 130-Square Armature Cable (CV08C) 28
8.21 Standard 130-Square Armature Cable for Motor with Brake (CV08D) 30
8.22 BTT06 Battery Cable (CV09A) 32
8.23 Connector for 070P 33
8.24 Optical Communication Cable inside VLBus–V Panel (CV23A) 34
8.25 Optical Communication Cable outside VLBus–V Panel (CV24A) 34

Configuration of Peripheral Equipment

The configuration of the peripheral equipment is shown below. The NCBOY is not attached with connectors or other accessories, which should be provided by the customer. Confirm the assembly parts, cable length, etc., in this manual.
For the products of the other makers, such as brake power supply and noise filter, only the reference specifications are contained in this manual. For further information on them, consult the appropriate maker's manual.

CN6: Power cable (for 008P to 035P)

Single phase cable	CV06A	(8–14)
Three-phase cable	CV06B	(8–15)
Connector for 070P	CV06C	(8–23)

CN7: MC cable (for 008P to 035P)

Internal reverse-current absorption resistor	CV07A	(8–16)
Internal reverse-current absorption resistor	CV07B	(8–17)
Connector for 070P	CV07C	(8–23)

Noise filter	(8–6)
Brake power supply	(8–2)
ACL/DCL	(8–7)
External reverse-current absorption resistor	(8–5)

CN8: Armature cable (for 008P to 035P)

For ZA motor	CV08A	(8–18)
For ZA motor with brake	CV08B	(8–19)
Small-capacity standard cable – 130 mm square	CV08C	(8–20)
Small-capacity standard cable with brake – 130 mm square	CV08D	(8–21)
Connector for 070P	CV06F	(8–23)

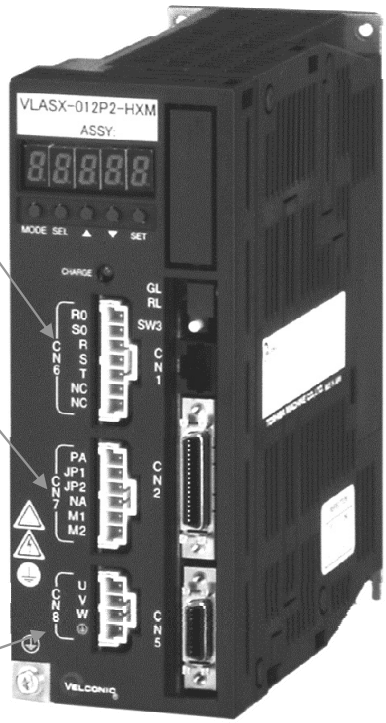

CN9: ABS battery for maintaining absolute position

ABS battery for maintaining absolute position	LRV03	(8–3)
ABS battery for maintaining absolute position	BTT06	(8–4)
BTT06 battery cable	CV09A	(8–22)

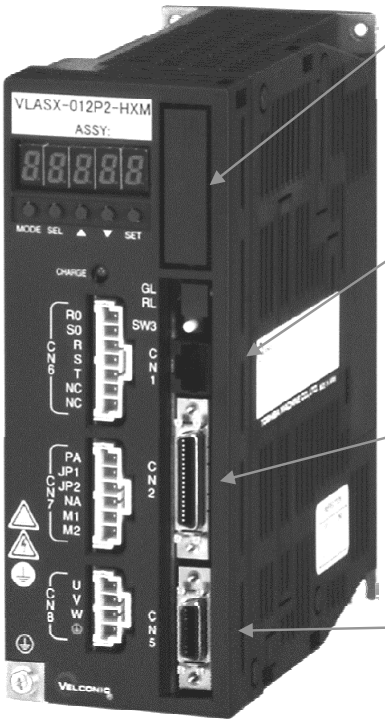

Option slot

–X (None)

–V (VLBus–V)

Optical communication cable	CV23A	(8–24)
Optical communication cable	CV24A	(8–25)

–A (Analog I/O)

CN1: RS232C

RS232C conversion connector	CV01C	(8–8)

CN2: I/O signal cable

I/O signal cable	CV02C	(8–9)
External display unit	DPA–80	(8–1)

CN5: Sensor cable

Standard serial ABS	CV05D	(8–10)
ZA serial ABS	CV05E	(8–11)
Standard resolver	CV05G	(8–12)
ZA resolver	CV05H	(8–13)

8.1 External Display Unit (DPA–80)

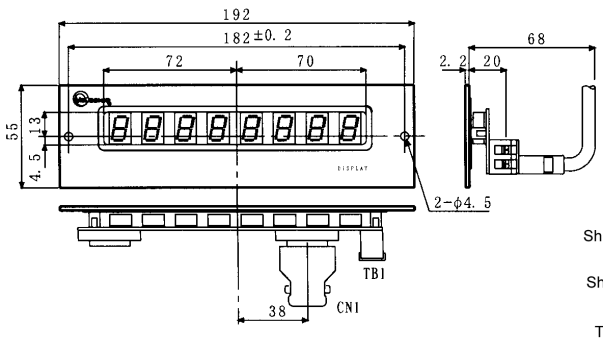

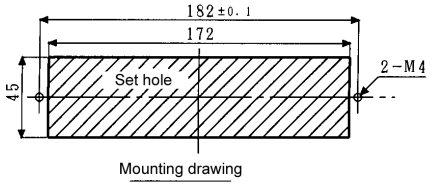

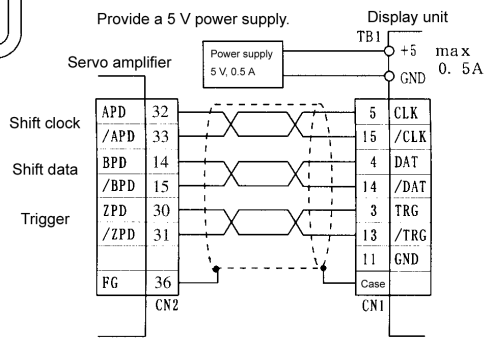

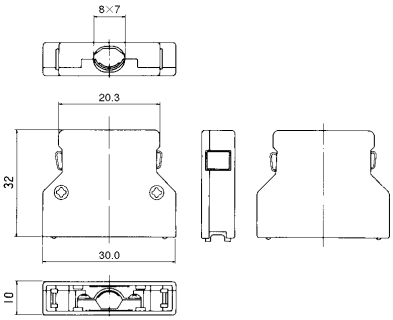

No. of pins	20
Plug	PCR–E20FS
Case	PCS–E20LB

Honda Tsushin-make

8.2 Brake Power Supply

* For the applicable motors, see Section 2.

P15E–24–N (Cosel-make)

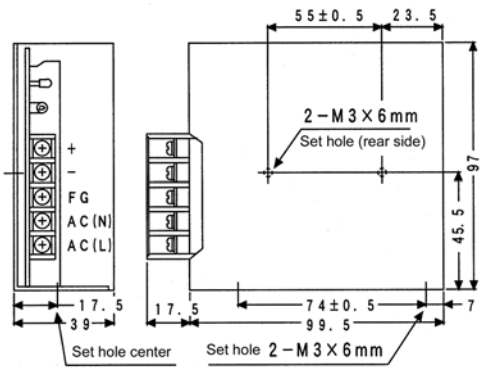

P30E–24–N (Cosel-make)

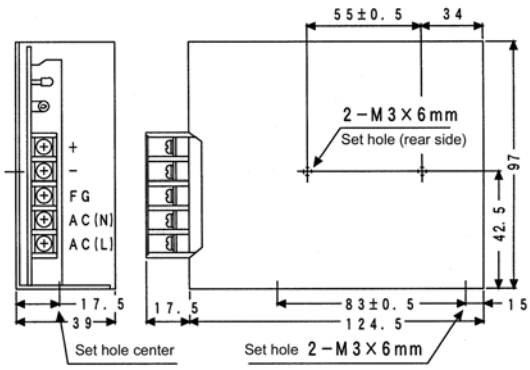

P50E–24–N (Cosel-make)

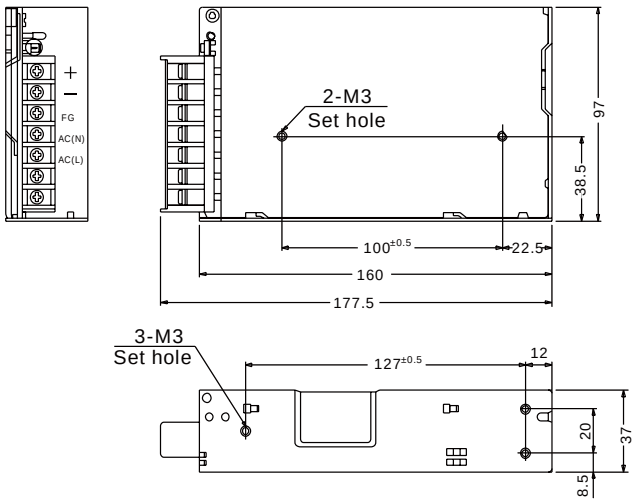

	P15E–24–N	P30E–24–N	P50E–24–N
Input voltage	Single phase AC85 ~ 264 V		
Output voltage	DC24 V		
Output current	0.7 A	1.3 A	2.1 A

8.3 ABS Batteries for Maintaining Absolute Position (LRV03)

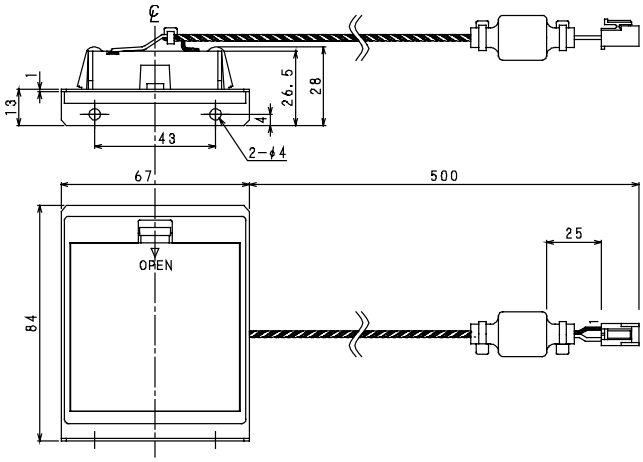

Mount separately from the amplifier and connect, using the attached cable.

Type	LRV03
Batteries	AA alkaline batteries

8.4 ABS Battery for Maintaining Absolute Position (BTT06)

Mount separately from the amplifier and connect, using a cable (CV09A–500A) that is separately provided for an extra price.

Type	BTT06
Batteries	AA lithium battery

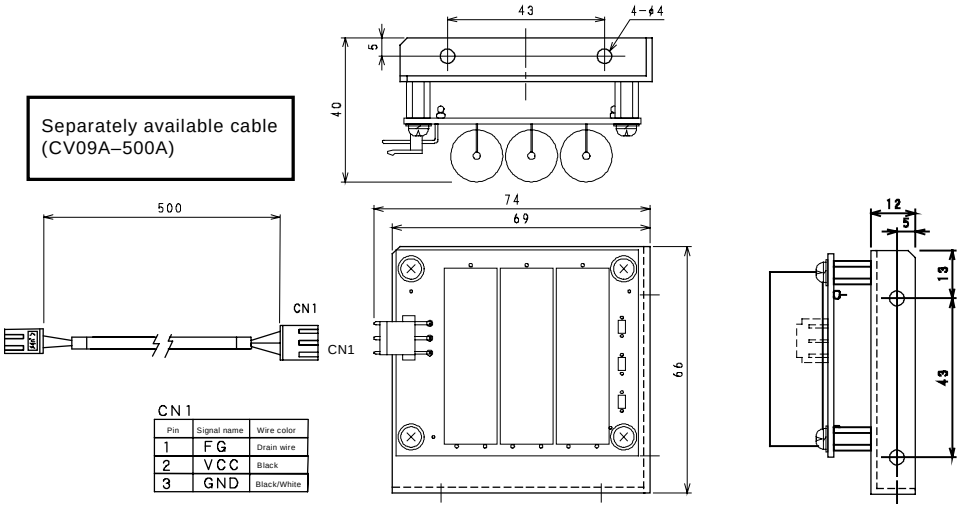

CN1

Pin	Signal name	Wire color
1	FG	Drain wire
2	VCC	Black
3	GND	Black/White

8.5 External Reverse-Current Absorption Resistor

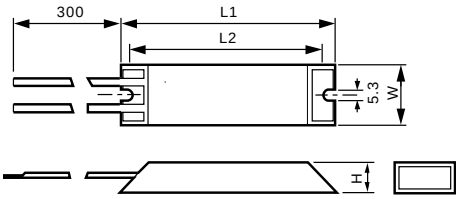

	Type	Absorption capacity	L1	L2	W	H
A	RGH60A 100 Ω	30 W	115	100	40	20
B	RGH200A 30 Ω	100 W	215	200	50	25
C	RGH400A 30 Ω	200 W	265	250	60	30

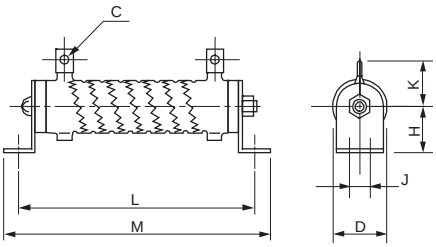

(mm)

GRZG400 3R0K	L	M	H	K	D	J	C
	385	411	40	46	47	9.5	Ø8.2

8.6 Noise Filter (TDK-Make)

For the combination with motors, see Para. 2.2.

Rated output	Type	Connecting terminal
0.03 kW ~ 0.5 kW	ZRAC2206–11	Connect terminals 3 and 4 with the power supply and terminals 1 and 2 with the main circuit power supply terminals R and S of the servo amplifier.
0.6 kW ~ 0.8 kW	ZRAC2210–11	
1.0 kW ~ 1.5 kW	ZRWT2210–ME	Connect terminals 4, 5, 6 with the power supply and terminals 1, 2, 3 with the primary side of the main circuit MC contactor.
1.8 kW ~ 3.0 kW	ZRWT2220–ME	
4.5 kW ~ 5.0 kW	ZRWT2230–ME	
7.0 kW ~ 10 kW	ZRCT5050–MF	
11 kW ~ 14 kW	ZRCT5080–MF	
20 kW, 55 kW	ZRCT5150–MF	
33 kW	ZRCT5200–MF	

ZRAC2206–11, ZRAC2210–11

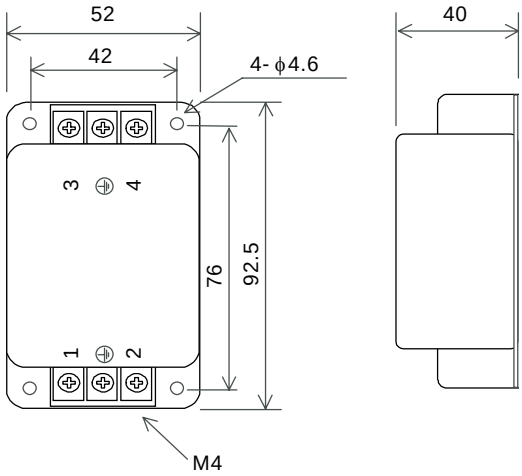

ZRWT2210–ME, ZRWT2220–ME, ZRWT2230–ME

	H	W	D	A	B	Wiring screw
ZRWT2210–ME	194	90	40	170	68	M4 +
ZRWT2220–ME	214	100	50	190	78	M4 +
ZRWT2230–ME	236	125	60	190	101	With M6 hexagon socket head cap screw

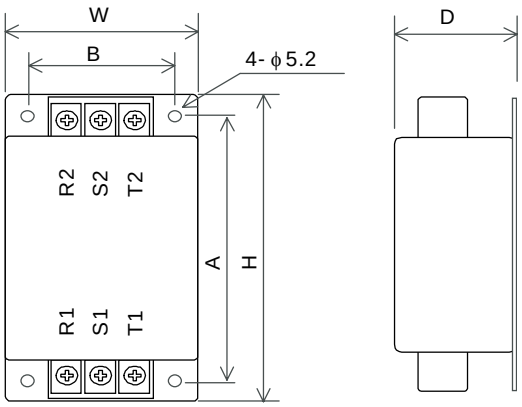

Case grounding (Connect a grounding wire to a wiring screw.)

ZRCT5©©©–MF

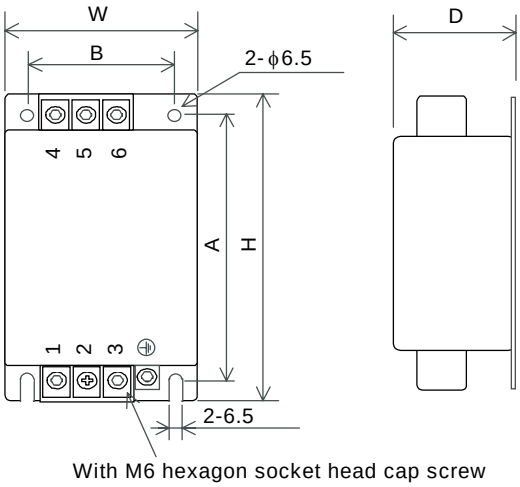

	H	W	D	A	B	C
ZRCT5050–MF	396	164	68	369	135	M6
ZRCT5080–MF	445	169	72	418	141	M8
ZRCT5150–MF	517	190	87	490	160	M8
ZRCT5200–MF	605	197	107	590	152	M10

8.7 ACL/DCL

AC and DC reactors for suppressing harmonic waves.

ACL (008P2, 012P2, 025P2, 035P3)

Motor capacity	Amp. model	Amp. spec.	Reactor specification												Fig.
			Reactor type	Inductance	Rated cur.	W	H	D	E	A	B	G	Wire size	Mass	
				(mH)	(A)	(mm)	(mm)	(mm)	(mm)	(mm)	(mm)	(mm)	(mm^2)	(kg)	
200 W or less	–008P2	200 V single phase	#P0243601	2.5	3.3	60	55	40	50	40	32	4	1.25	0.4	A
400 W 500 W	–012P2		#P0243602	2.5	8.1	95	65	45	70	55	45	4	5.5	1.2	
600 W 800 W	–025P2		#P0243603	2	13	See the figure.								1.9	B
1 kW 1.5 kW	–035P3	200 V 3-phase	#P0243604	0.7	15	See the figure.								3	C

DCL (070P3)

Motor capacity	Amp. model	Amp. spec.	Reactor specification												Fig.
			Reactor type	Inductance	Rated cur.	W	H	D	E	A	B	G	Wire size	Mass	
				(mH)	(A)	(mm)	(mm)	(mm)	(mm)	(mm)	(mm)	(mm)	(mm^2)	(kg)	
1. 8 kW		200 V 3-phase	#P0210905	2	11	115	80	45	75	70	35	5	5.5	1.2	A
2. 0 kW 2 4 kW 3. 0 kW	–070P3		#P0210906	1.5	20	135	100	63	90	80	47	5	8	2.8	

Fig. A

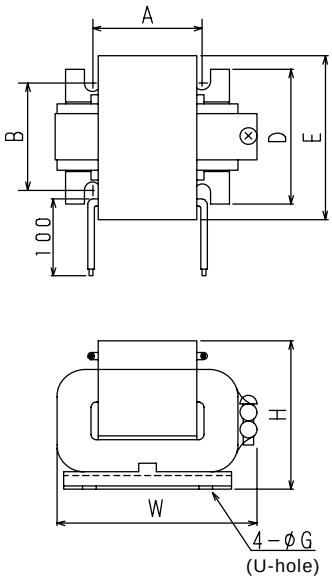

Fig. B

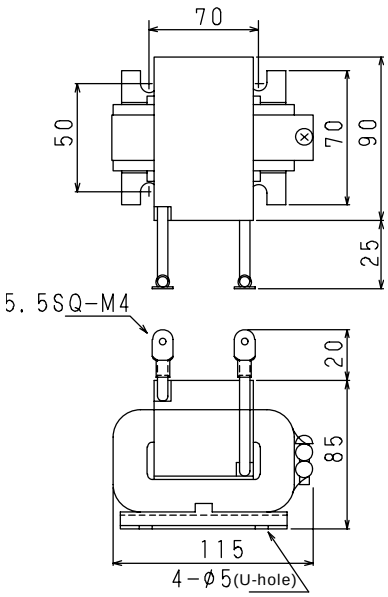

Fig. C

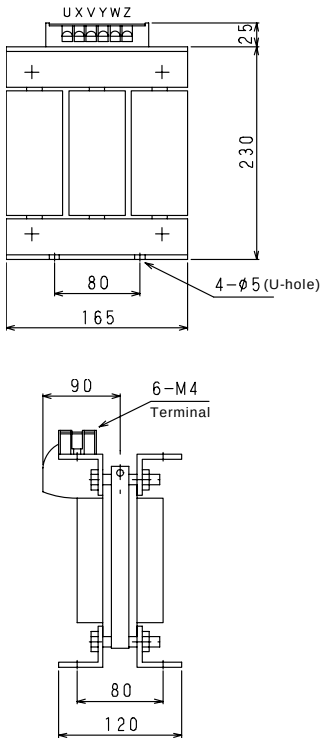

DCL connection

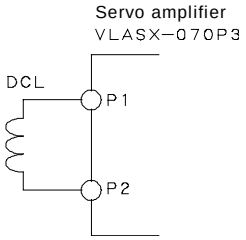

ACL connection

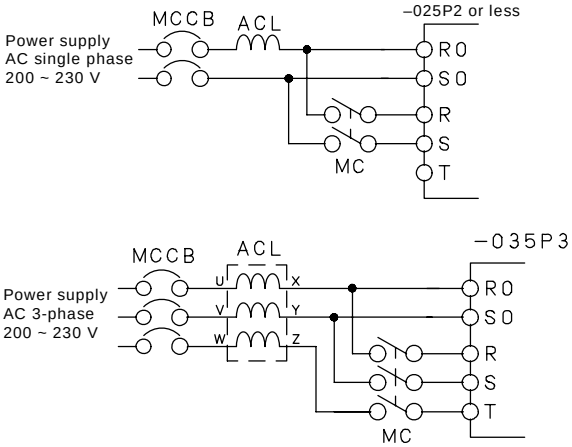

8.8 RS232C Conversion Connector (CV01C)

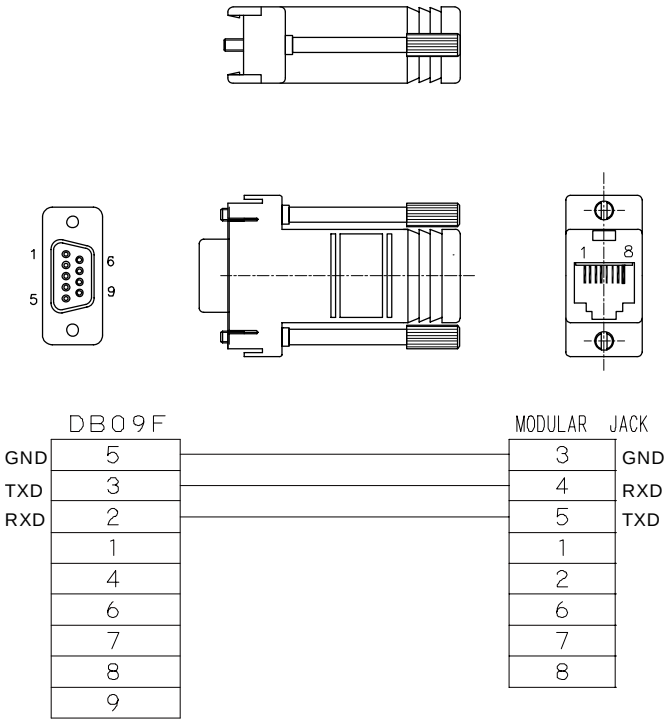

To connect with the servo amplifier, a commercially available LAN cable (category 5 or over with shield/straight) is required.

- Recommended cable: NWNMC5E–STN–SSMB–BL–3 3 m (Misumi-make)

⚠ **CAUTION**	⚠ The CN1 and CV01C modular jacks of the servo amplifier have the same profile as the LAN connector for a personal computer, etc.. DO NOT connect by mistake. Otherwise, the equipment may malfunction.

8.9 I/O Signal Cable (CV02C)

Amplifier side CN2

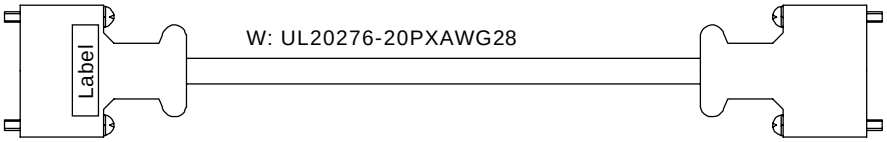

CN: 54306–3619 (Molex-make)

Clamp: 54331–0361 (Molex-make)

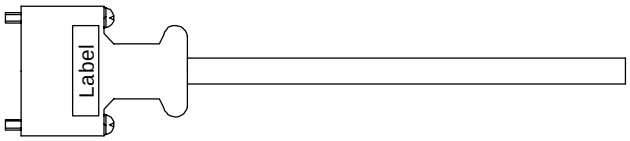

Amp. side CN2						
Pin No.	Signal name	Wire color	Dot color	Dot	Pin No.	Signal name
1	INCOM	Orange	Red	·	1	INCOM
2	IN0	Orange	Black	·	2	IN0
3	IN1	Gray	Red	·	3	IN1
4	IN2	Gray	Black	·	4	IN2
5	IN3	White	Red	·	5	IN3
6	IN4	White	Black	·	6	IN4
7	IN5	Yellow	Red	·	7	IN5
8	IN6	Yellow	Black	·	8	IN6
19	NC	Pink	Black	· · ·	19	NC
20	NC	Pink	Red	· · ·	20	NC
21	IN7	Orange	Red	· · · ·	21	IN7
22	OUT0	Gray	Red	· · · · ·	22	OUT0
23	OUT1	Gray	Black	· · · ·	23	OUT1
24	OUT2	White	Red	· · · · ·	24	OUT2
25	OUT3	White	Black	· · · · ·	25	OUT3
26	OUT4	Yellow	Red	· · · ·	26	OUT4
27	OUTCOM	Yellow	Black	· · · ·	27	OUTCOM
9	AG	Pink	Black	·	9	AG
10	NC	Pink	Red	·	10	NC
		Orange	Black	· ·		
11	NC	Orange	Red	· ·	11	NC
12	REF	Gray	Red	· ·	12	REF
13	AG	Gray	Black	· ·	13	AG
28	CLI	White	Red	· ·	28	CLI
29	AG	White	Black	· ·	29	AG
14	BPD	Yellow	Red	· ·	14	BPD
15	/BPD	Yellow	Black	· ·	15	/BPD
16	FMB	Pink	Red	· ·	16	FMB
17	/FMB	Pink	Black	· ·	17	/FMB
18	GND	Orange	Black	· · ·	18	GND
30	ZPD	Gray	Red	· · ·	30	ZPD
31	/ZPD	Gray	Black	· · ·	31	/ZPD
32	APD	White	Red	· · ·	32	APD
33	/APD	White	Black	· · ·	33	/APD
34	FMA	Yellow	Red	· · ·	34	FMA
35	/FMA	Yellow	Black	· · ·	35	/FMA
36					36	
Case	FG	Drain wire			Case	FG

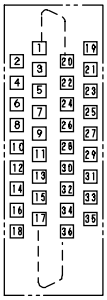

CN2 pin arrangement
When viewed from
soldering surface side.

Cable type		Length	Standard
CV02C–	101*	1 m	®
	201*	2 m	®
	301*	3 m	%
	501*	5 m	%

%: Standard cable ®: Can be fabricated to order.

* Treatment of cable end
A: Connectors on both ends
B: Connector on amplifier side end only

8.10 Standard Serial ABS Cable (CV05D)

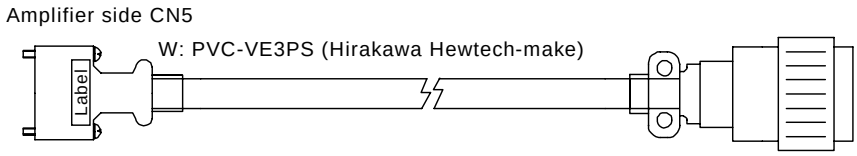

CN: 54306–2019 (Molex-make)
Clamp: 54331–0201 (Molex-make)

CN: JRC16WPQ–7S(71) (Hirose-make)
Clamp: JRC16WPQ–CP10(71) (Hirose-make)

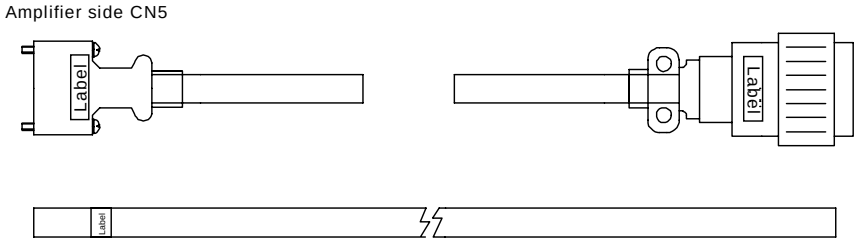

Amplifier side CN5 — Motor side plug

Pin No.	Signal name	Wire color	Pin No.
4	E5V	Red	2
1	E0V	Black	1
12	BT+	Blue	4
13	BT−	Green	3
14	SD+	Orange	6
15	SD−	Orange/White	7
20	FG	Shield	5

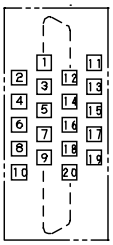

CN5 pin arrangement
When viewed from
soldering surface side

Cable type		Length	Standard
CV05D–	101*	1 m	®
	201*	2 m	®
	301*	3 m	%
	401*	4 m	®
	501*	5 m	%
	601*	6 m	®
	701*	7 m	®
	801*	8 m	®
	901*	9 m	®
	102*	10 m	%
	152*	15 m	®
	202*	20 m	®
	252*	25 m	®
	302*	30 m	®

%: Standard cable ®: Can be fabricated to order.

* Treatment of cable end
- A: Connectors on both ends
- B: Connector on amplifier side end only
- C: Connector on motor side end only
- Z: No connector

8.11 ZA Motor Serial ABS Cable (CV05E)

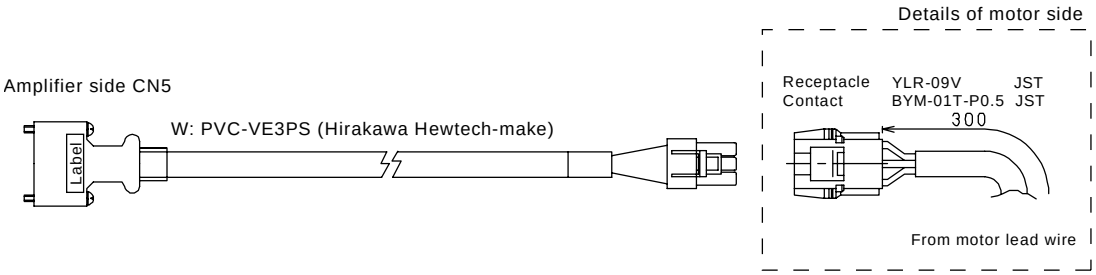

CN: 54306–2019 (Molex-make)
Clamp: 54331–0201 (Molex-make)

CN: YLP–09V (JST-make)
Contact: BYF–01T–P0.5 (JST-make)
Contact: BYF–41T–P0.5 (JST-make)

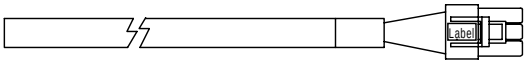

Amplifier side CN5 — Motor side plug

Pin No.	Signal name	Wire color	Pin No.
4	E 5 V	Red	2
1	E 0 V	Black	3
1 2	B T +	Blue	5
1 3	B T −	Green	6
1 4	S D +	Orange	7
1 5	S D −	Orange/White	8
2 0	F G	Shield	9

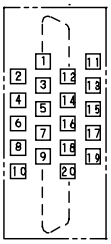

CN5 pin arrangement
When viewed from
soldering surface side

Cable type		Length	Standard
CV05E–	101*	1 m	®
	201*	2 m	®
	301*	3 m	%
	401*	4 m	®
	501*	5 m	%
	601*	6 m	®
	701*	7 m	®
	801*	8 m	®
	901*	9 m	®
	102*	10 m	%
	152*	15 m	®
	202*	20 m	®
	252*	25 m	®
	302*	30 m	®

%: Standard cable ®: Can be fabricated to order.

* Treatment of cable end
A: Connectors on both ends
C: Connector on motor side end only

Use the following types.
B: CV05D–©©©B
Z: CV05D–©©©Z

8.12 Standard Resolver Cable (CV05G)

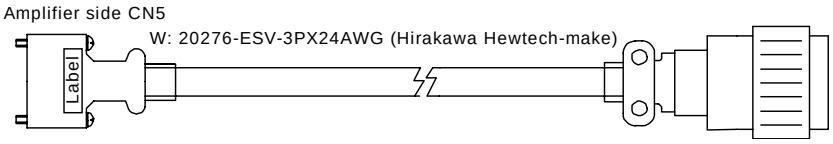

CN: 54306–2019 (Molex-make)
Clamp: 54331–0201 (Molex-make)

Plug: JRC16WPQ–7S(71) (Hirose-make)
Clamp: JRC16WPQ–CP10(71) (Hirose-make)

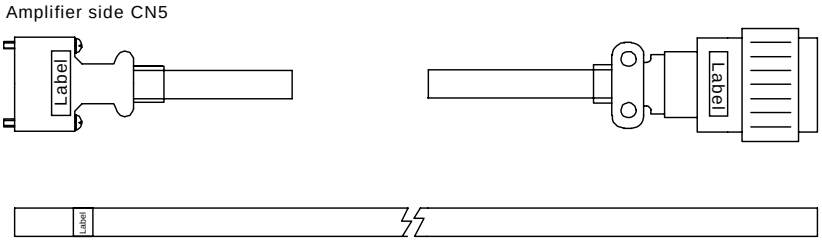

Amplifier side CN5 — Motor side plug

Pin No.	Signal name	Wire color	Pin No.
8	R 1	White	1
9	R 2	Green	2
2	S 1	Red	5
3	S 3	Black	7
6	S 2	Yellow	6
7	S 4	Blue	3
11	AG	Shield	

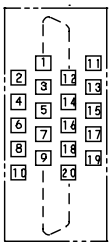

CN5 pin arrangement
When viewed from
soldering surface side

Cable type		Length	Standard
CV05G–	101*	1 m	®
	201*	2 m	®
	301*	3 m	%
	401*	4 m	®
	501*	5 m	%
	601*	6 m	®
	701*	7 m	®
	801*	8 m	®
	901*	9 m	®
	102*	10 m	%
	152*	15 m	®
	202*	20 m	®
	252*	25 m	®
	302*	30 m	®
	352*	35 m	®
	402*	40 m	®
	452*	45 m	®
	502*	50 m	®
	552*	55 m	®
	602*	60 m	®
	702*	70 m	®
	802*	80 m	®
	902*	90 m	®
	103*	100 m	®
	113*	110 m	®
	123*	120 m	®

%: Standard cable ®: Can be fabricated to order.

* Treatment of cable end
- A: Connectors on both ends
- B: Connector on amplifier side end only
- C: Connector on motor side end only
- Z: No connector

8.13 ZA Motor Resolver Cable (CV05H)

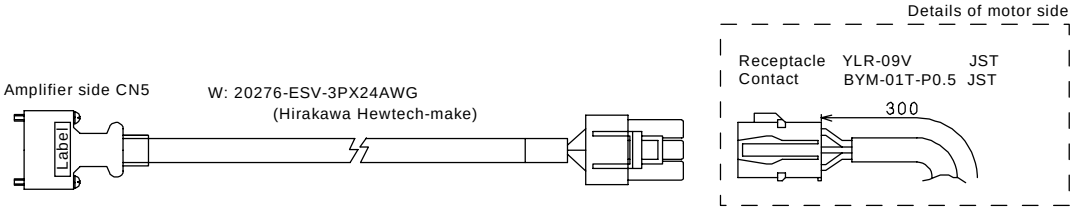

CN: 54306–2019 (Molex-make)
Clamp: 54331–0201 (Molex-make)

CN: YLP–09V (JST-make)
Contact: BYF–01T–P0.5A (JST-make)

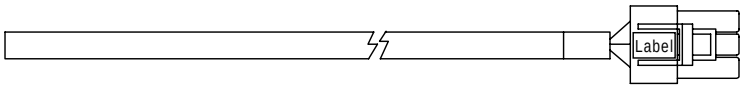

Amplifier side CN5

Pin No.	Signal name	Wire color
8	R 1	White
9	R 2	Green
2	S 1	Red
3	S 3	Black
6	S 2	Yellow
7	S 4	Blue
11	AG	Shield

Motor side plug

Pin No.	Signal name	Wire color
1	R 1	White
2	R 2	Green
4	S 1	Red
5	S 3	Black
7	S 2	Yellow
8	S 4	Blue
9	AG	Drain

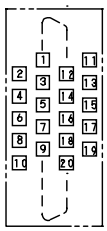

CN5 pin arrangement
When viewed from
soldering surface side.

Cable type		Length	Standard
CV05E–	101*	1 m	®
	201*	2 m	®
	301*	3 m	%
	401*	4 m	®
	501*	5 m	%
	601*	6 m	®
	701*	7 m	®
	801*	8 m	®
	901*	9 m	®
	102*	10 m	%
	152*	15 m	®
	202*	20 m	®
	252*	25 m	®
	302*	30 m	®
	352*	35 m	®
	402*	40 m	®
	452*	45 m	®
	502*	50 m	®
	552*	55 m	®
	602*	60 m	®
	702*	70 m	®
	802*	80 m	®
	902*	90 m	®
	103*	100 m	®
	113*	110 m	®
	123*	120 m	®

%: Standard cable ®: Can be fabricated to order.

* Treatment of cable end
A: Connectors on both ends
C: Connector on motor side end only

Use the following types.
B: CV05G–©©©B
Z: CV05G–©©©Z

8.14 Single Phase Power Cable (CV06A)

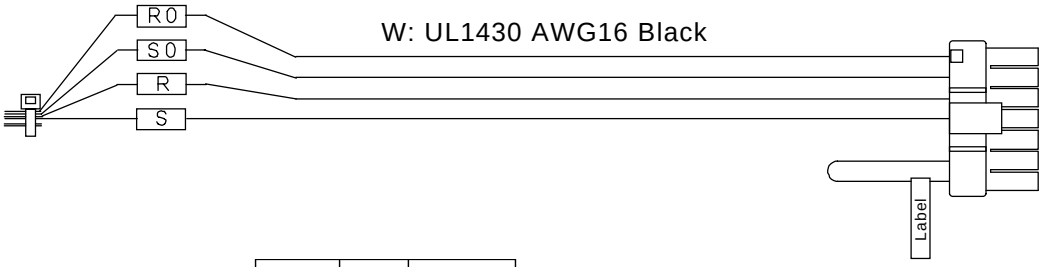

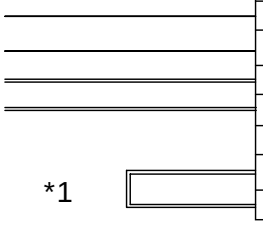

Pin No.	Wire color	Signal name
1	Black	R 0
2	Black	S 0
3	Black	R
4	Black	S
5		
6	Black	NC
7	Black	NC

CN: DF7–7S–3.96C (Hirose-make)
Contact: DF7–1618SC (Hirose-make)
Clamp: DF7–7RS/P–3.96 (Hirose-make)

Cable type		Length	Standard
CV06A–	101B	1 m	%
	301B	3 m	%
	501B	5 m	%

%: Standard cable

*1: Wiring between 6 (NC) and 7 (NC) is performed in such a manner that other Toshiba Machine's model can be used also. When you fabricate a cable, its wiring is unnecessary.

8.15 Three (3)-Phase Power Cable (CV06B)

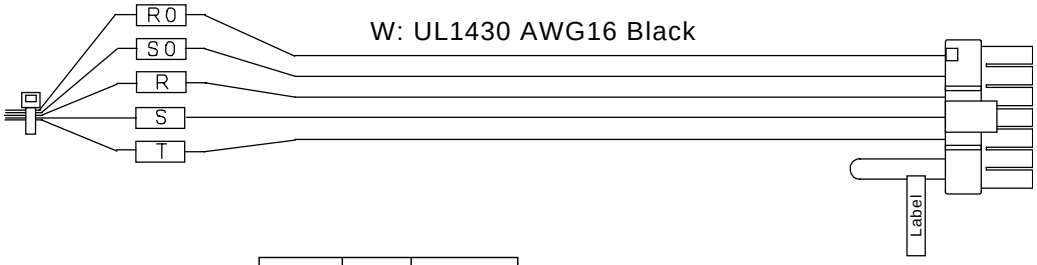

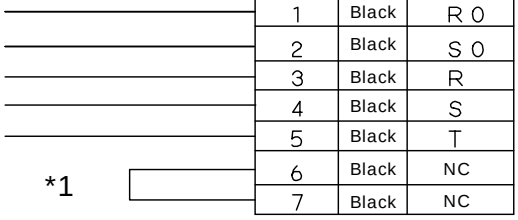

Pin No.	Wire color	Signal name
1	Black	R 0
2	Black	S 0
3	Black	R
4	Black	S
5	Black	T
6	Black	NC
7	Black	NC

CN: DF7–7S–3.96C (Hirose-make)
Contact: DF7–1618SC (Hirose-make)
Clamp: DF7–7RS/P–3.96 (Hirose-make)

Cable type		Length	Standard
CV06B–	101B	1 m	%
	301B	3 m	%
	501B	5 m	%

%: Standard cable

*1: Wiring between 6 (NC) and 7 (NC) is performed in such a manner that other Toshiba Machine's model can be used also. When you fabricate a cable, its wiring is unnecessary.

8.16 Internal Reverse-Current Absorption Resistor/MC Cable (CV07A)

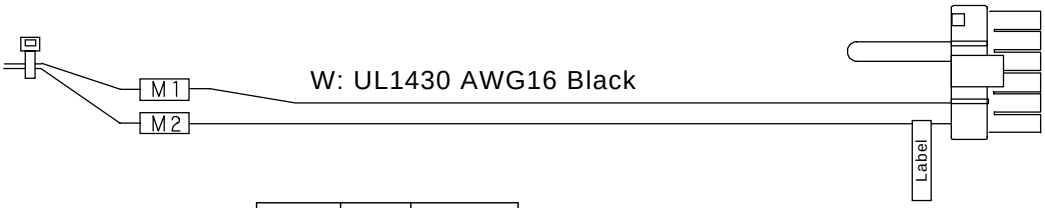

Pin No.	Wire color	Signal name
1		
2	Black	JP1
3	Black	JP2
4		
5	Black	M1
6	Black	M2

CN: DF7–6S–3.96C (Hirose-make)
Contact: DF7–1618SC (Hirose-make)
Clamp: DF7–6RS/P–3.96 (Hirose-make)

Cable type		Length	Standard
CV07A–	101B	1 m	%
	301B	3 m	%
	501B	5 m	%

%: Standard cable

8.17 External Reverse-Current Absorption Resistor/MC Cable (CV07B)

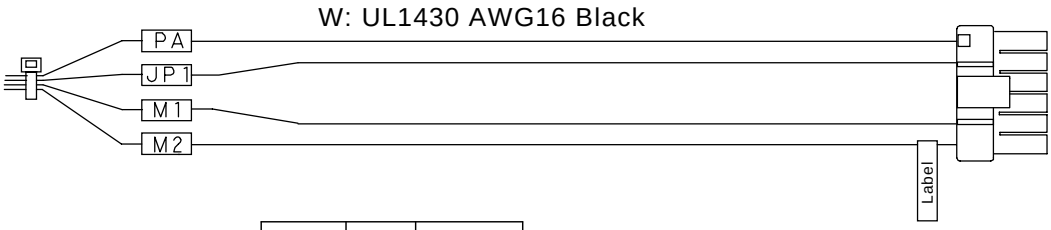

Pin No.	Wire color	Signal name
1	Black	PA
2	Black	JP1
3		
4		
5	Black	M1
6	Black	M2

CN: DF7–6S–3.96C (Hirose-make)
Contact: DF7–1618SC (Hirose-make)
Clamp: DF7–6RS/P–3.96 (Hirose-make)

Cable type		Length	Standard
CV07B–	101B	1 m	%
	301B	3 m	%
	501B	5 m	%

%: Standard cable

8.18 ZA Motor Armature Cable (CV08A)

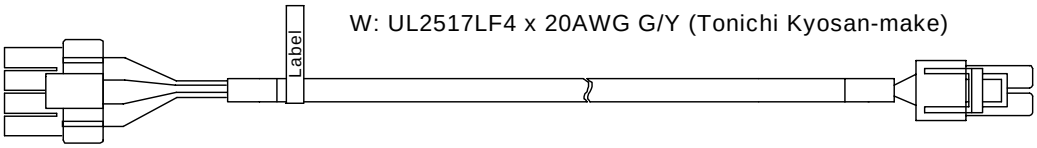

CN: DF7–4S–3.96C (Hirose-make)
Contact: DF7–2022SC (Hirose-make)
Clamp: DF7–4RS/P–3.96 (Hirose-make)

CN: YLP–04V (JST-make)
Contact: BYF–41T–P0.5 (JST-make)

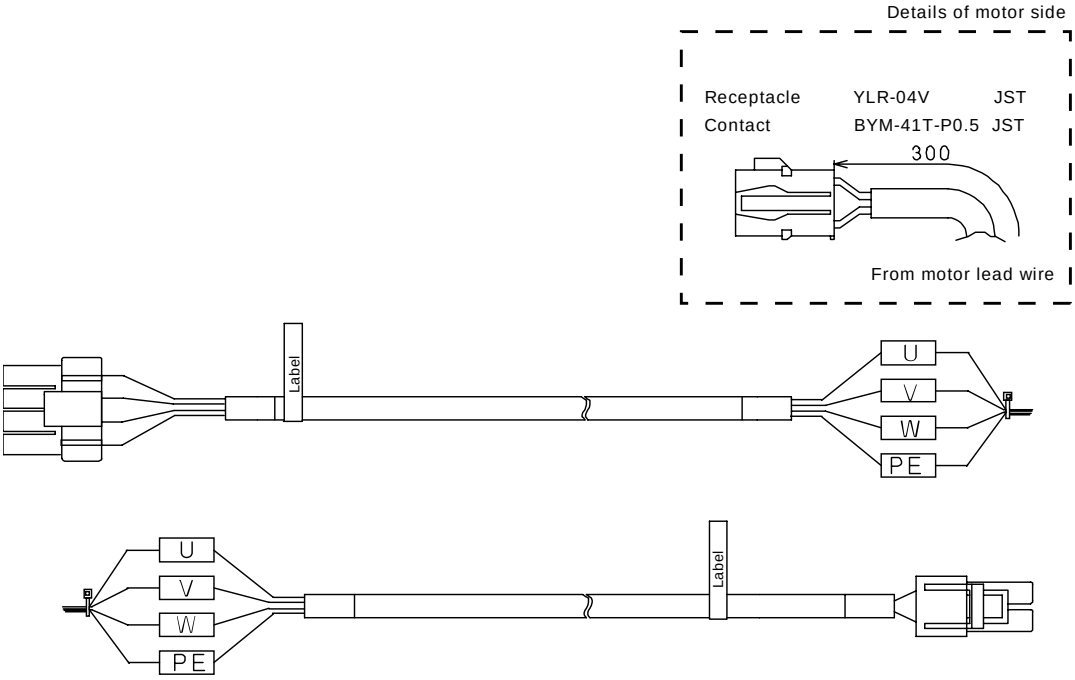

Pin No.	Wire color	Signal name		Pin No.
1	Red	U		1
2	White	V		2
3	Black	W		3
4	YG	PE		4

* Treatment of cable end
- A: Connectors on both ends
- B: Connector on amplifier side end only
- C: Connector on motor side end only
- Z: No connector

Cable type		Length	Standard
CV08A–	101*	1 m	®
	201*	2 m	®
	301*	3 m	%
	401*	4 m	®
	501*	5 m	%
	601*	6 m	®
	701*	7 m	®
	801*	8 m	®
	901*	9 m	®
	102*	10 m	%
	152*	15 m	®
	202*	20 m	®
	252*	25 m	®
	302*	30 m	®
	352*	35 m	®
	402*	40 m	®
	452*	45 m	®
	502*	50 m	®
	552*	55 m	®
	602*	60 m	®

%: Standard cable ®: Can be fabricated to order.

Any cable whose length exceeds 60 m cannot be used. Consult with us then.

8.19 Armature Cable for ZA Motor with Brake (CV08B)

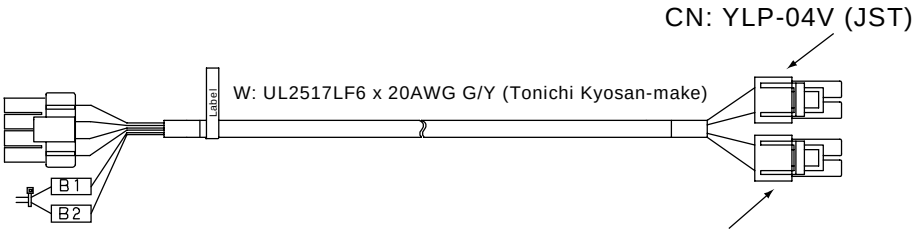

CN: DF7–4S–3.96C (Hirose-make)
Contact: DF7–2022SC (Hirose-make)
Clamp: DF7–4RS/P–3.96 (Hirose-make)

CN: YLP–02V (JST-make)
Contact: BYF–41T–P0.5 (JST-make)

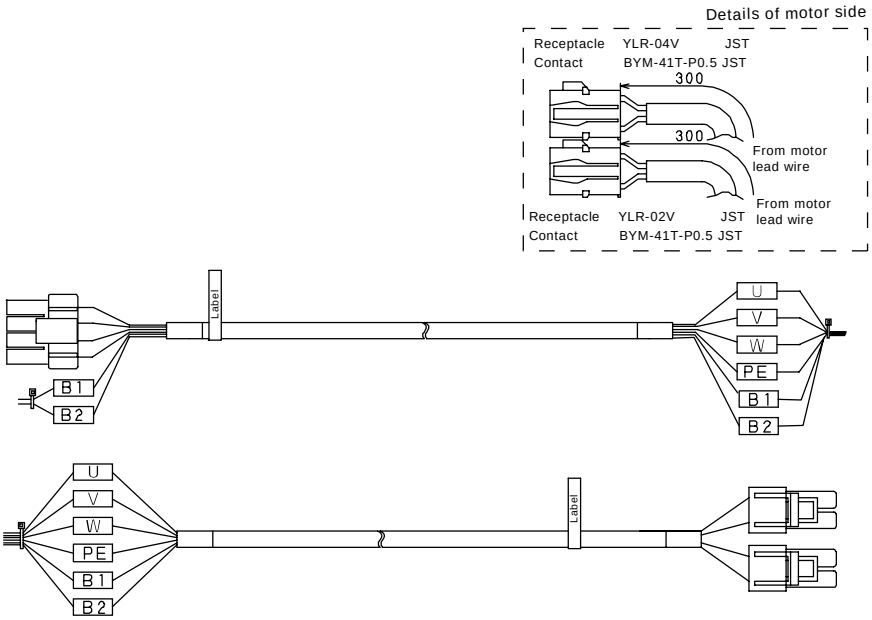

Pin No.	Wire color	Signal name		Pin No.
1	Red	U		1
2	White	V		2
3	Black	W		3
4	YG	PE		4

	Blue	B1		1
	Brown	B2		2

* Treatment of cable end
- A: Connectors on both ends
- B: Connector on amplifier side end only
- C: Connector on motor side end only
- Z: No connector

Cable type		Length	Standard
CV08B–	101*	1 m	®
	201*	2 m	®
	301*	3 m	%
	401*	4 m	®
	501*	5 m	%
	601*	6 m	®
	701*	7 m	®
	801*	8 m	®
	901*	9 m	®
	102*	10 m	%
	152*	15 m	®
	202*	20 m	®
	252*	25 m	®
	302*	30 m	®
	352*	35 m	®
	402*	40 m	®
	452*	45 m	®
	502*	50 m	®
	552*	55 m	®
	602*	60 m	®

%: Standard cable ®: Can be fabricated to order.

Any cable whose length exceeds 60 m cannot be used. Consult with us then.

8.20 Standard 130-Square Armature Cable (CV08C)

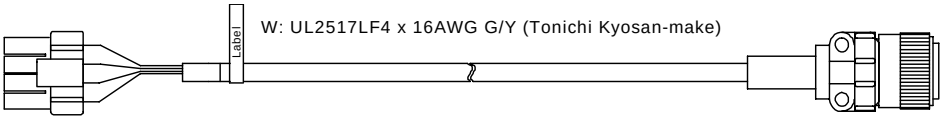

CN: DF7–4S–3.96C (Hirose-make)

Contact: DF7–1618SC (Hirose-make)

Clamp: DF7–4RS/P–3.96 (Hirose-make)

CN: JL04V–6A20–15SE–EB–R (JAE-make)

Clamp: JL04–2022CK(09)–R (JAE-make)

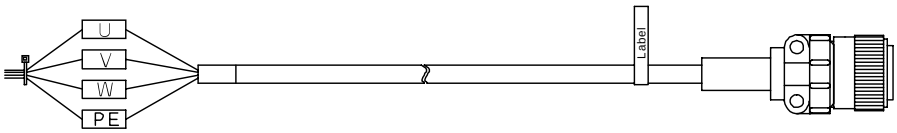

Pin No.	Wire color	Signal name		Pin No.
1	Red	U		A
2	White	V		B
3	Black	W		C
4	YG	PE		D

* Treatment of cable end
- A: Connectors on both ends
- B: Connector on amplifier side end only
- C: Connector on motor side end only
- Z: No connector

Cable type		Length	Standard	
CV08C–	101*	1 m	®	
	201*	2 m	®	
	301*	3 m	%	
	401*	4 m	®	
	501*	5 m	%	
	601*	6 m	®	
	701*	7 m	®	
	801*	8 m	®	
	901*	9 m	®	
	102*	10 m	%	
	152*	15 m	®	
	202*	20 m	®	
	252*	25 m	®	
	302*	30 m	®	
	352*	35 m	®	
	402*	40 m	®	
	452*	45 m	®	
	502*	50 m	®	
	552*	55 m	®	
	602*	60 m	®	
	702*	70 m	®	(Note 1)
	802*	80 m	®	(Note 1)
	902*	90 m	®	(Note 1)
	103*	100 m	®	(Note 1)
	113*	110 m	®	(Note 1)
	123*	120 m	®	(Note 1)

%: Standard cable ®: Can be fabricated to order.

Note 1: When the cable length exceeds 60 m, some combinations may not be used. Consult with us.

⚠ **CAUTION**	⚠ DO NOT use this cable for connection with a motor of 1.8 kW or over.

8.21 Standard 130-Square Armature Cable for Motor with Brake (CV08D)

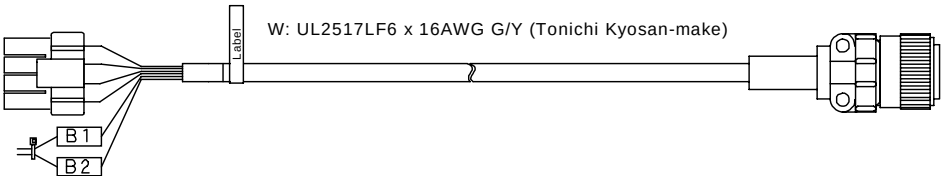

CN: DF7–4S–3.96C (Hirose-make)

Contact: DF7–1618SC (Hirose-make)

Clamp: DF7–4RS/P–3.96 (Hirose-make)

CN: JL04V–6A20–15SE–EB–R (JAE-make)

Clamp: JL04–2022CK(09)–R (JAE-make)

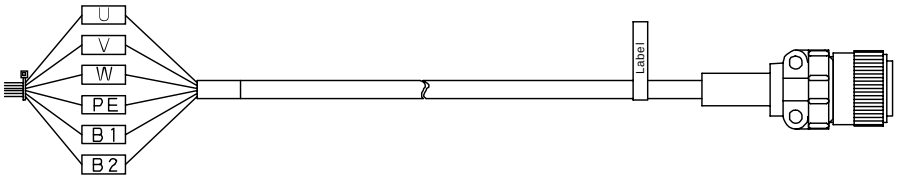

Pin No.	Wire color	Signal name	Pin No.
1	Red	U	A
2	White	V	B
3	Black	W	C
4	YG	PE	D
	Blue	B1	E
	Brown	B2	F

* Treatment of cable end
- A: Connectors on both ends
- B: Connector on amplifier side end only
- C: Connector on motor side end only
- Z: No connector

Cable type		Length	Standard	
CV08D–	101*	1 m	®	
	201*	2 m	®	
	301*	3 m	%	
	401*	4 m	®	
	501*	5 m	%	
	601*	6 m	®	
	701*	7 m	®	
	801*	8 m	®	
	901*	9 m	®	
	102*	10 m	%	
	152*	15 m	®	
	202*	20 m	®	
	252*	25 m	®	
	302*	30 m	®	
	352*	35 m	®	
	402*	40 m	®	
	452*	45 m	®	
	502*	50 m	®	
	552*	55 m	®	
	602*	60 m	®	
	702*	70 m	®	(Note 1)
	802*	80 m	®	(Note 1)
	902*	90 m	®	(Note 1)
	103*	100 m	®	(Note 1)
	113*	110 m	®	(Note 1)
	123*	120 m	®	(Note 1)

%: Standard cable ®: Can be fabricated to order.

Note 1: When the cable length exceeds 60 m, some combinations may not be used. Consult with us.

⚠ **CAUTION**	⚠ DO NOT use this cable for connection with a motor of 1.8 kW or over.

8.22 BTT06 Battery Cable (CV09A)

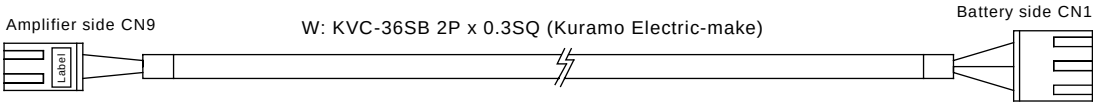

CN: VHR–2N (JST-make)
Contact: BVH–21T–1.1 (JST-make)

CN: VHR–3N (JST-make)
Contact: BVH–21T–1.1 (JST-make)

Amplifier side CN9

Pin No.	Signal name	Wire color
1	GND	Black/White
2	VCC	Black

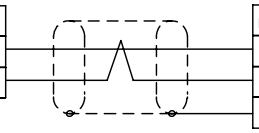

BTT06 side CN1

Pin No.	Signal name	Wire color
3	GND	Black/White
2	VCC	Black
1	FG	Drain wire

Cable type	Length	Standard
CV09A–500A	0.5 m	%

%: Standard cable

8.23 Connector for 070P

- CN6 (CV06C): When CN is used independently (PC 4/7-STF-7,62)

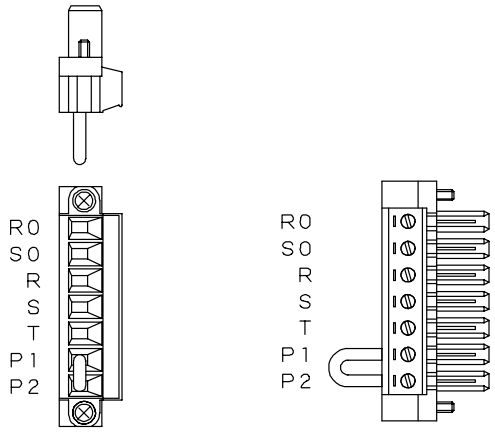

CN: PC 4/7-STF-7,62 (Phenix contact make)
W: UL1015 AWG12 Black

- CN7 (CV07C): When CN is used independently (PC 4/6-STF-7,62)

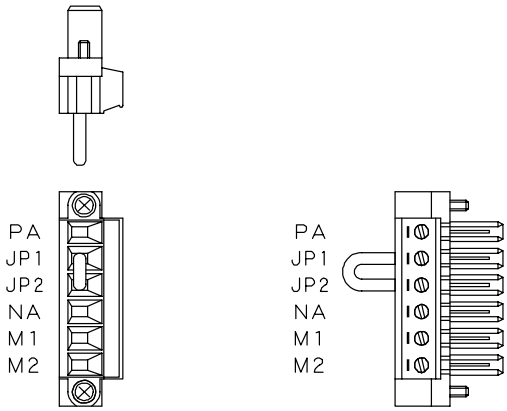

CN: PC 4/6-STF-7,62) (Phenix contact make)
W: UL1430 AWG16 Black

- CN8 (PC 4/4-STF-7,62)

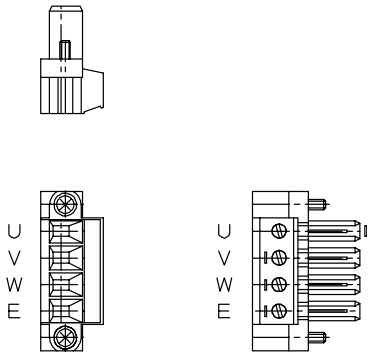

CN: PC 4/4-STF-7,62 (Phenix contact make)

Recommended driver: SZS 0.6 × 3.5

8.24 Optical Communication Cable inside VLBus–V Panel (CV23A)

Connector: RFA4011P (Mitsubishi Rayon-make) × 2
Fiber cable: GHEPP4001P (Mitsubishi Rayon-make) × 1

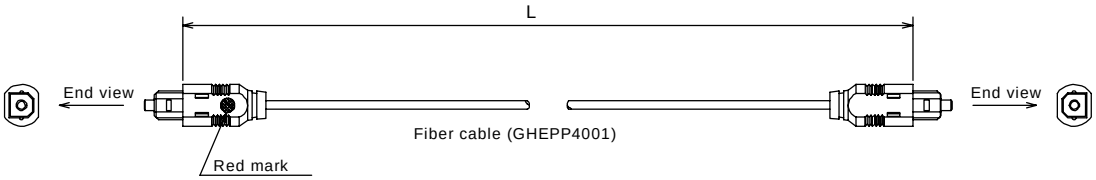

Cable type	Length (L)	Standard
CV23A–300A	300 +60/–0 mm	%
CV23A–500A	500 +60/–0 mm	%
CV23A–101A	1000 +100/–0 mm	%
CV23A–201A	2000 +100/–0 mm	%
CV23A–301A	3000 +100/–0 mm	%
CV23A–501A	5000 +100/–0 mm	%

%: Standard cable

8.25 Optical Communication Cable outside VLBus–V Panel (CV24A)

Connector: RFA4011P (Mitsubishi Rayon-make) × 4
Fiber cable: GHEPP4001P (Mitsubishi Rayon-make) × 2
Flexible cable: Oil-resistant flexible cable × 1

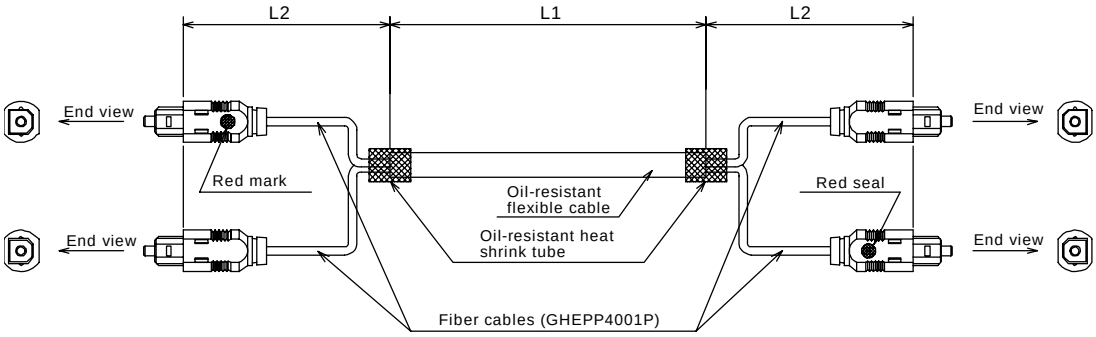

Cable type	Length (L1)	Length (L2)	Standard
CV24A–102A	8000 +120/–0 mm	1000 +100/–0 mm	%
CV24A–202A	17000 +120/–0 mm	1500 +100/–0 mm	%

®: Can be fabricated to order.

Characteristics	Section 9

9.1 Short-Time Overload 2

9.2 Electronic Thermal..... 4

9.1 Short-Time Overload

Alarm AL18 (instant thermal) occurs when the current exceeding the rated current by 20 % flows continuously. (If the current drops below 120 % even for an instant, calculation starts from the beginning.)
The time until alarm generation becomes shorter as overload increases. The time until the alarm occurs is figured out from the following expression.

$$t = \frac{k}{\frac{Ia}{Ir \times 1.2} - 1} \quad \text{(sec)}$$

k: Constant
Ir: Rated current
Ia: Present current

When the current as much as 200 % of the rated current runs continuously in the VLBSV–ZA04030, for instance, the alarm occurs in six (6) seconds.

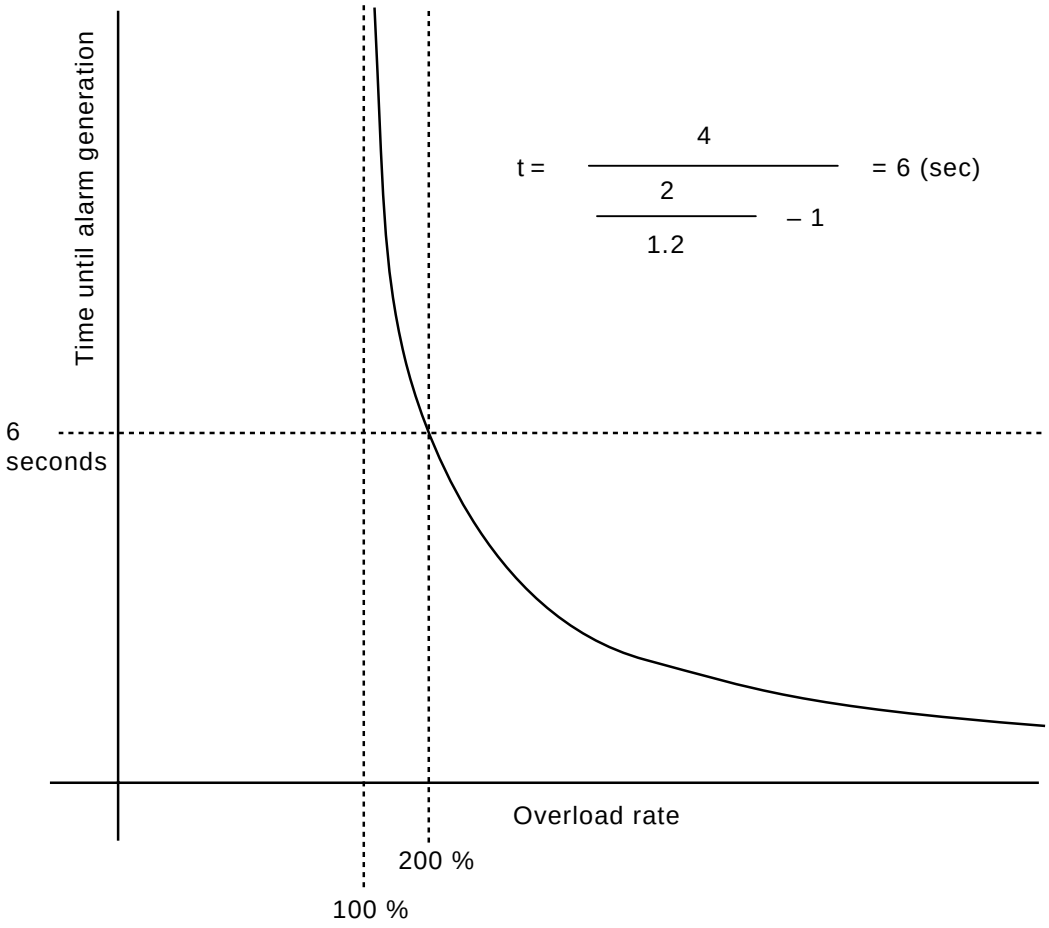

* Constant “k” varies with the motor used, as shown below.

Motor type	Value of “k”
VLBSV–ZA00330	1.5
VLBSV–ZA00530	2.0
VLBSV–ZA01030	2.5
VLBSV–ZA02030	3.0
VLBSV–ZA04030	4.0
Other motors	6.0

9.2 Electronic Thermal

The electronic thermal estimates a heat amount generated by the motor. When the electronic thermal value reaches 110 %, alarm 17 (motor overload) occurs. The alarm also generates when the effective current in excess of 105 % of the rated current runs continuously.
The time until the alarm generates can be calculated from the following expression.

$$t = -Te \times \ln\left(1 - \frac{1.05^2}{\left(\frac{Irms}{Ir}\right)^2}\right) \quad \text{(min)}$$

Ir: Rated current
Irms: Present effective current
Te: Motor heat time constant

$$\frac{Irms}{Ir} \times 100 = bL : \quad \text{Effective load rate}$$

When effective current that is 120 % of the rated current flows, for instance, the alarm occurs in 22 minutes. (Motor heat time constant of VLBSV–ZA04030: 15 min.)

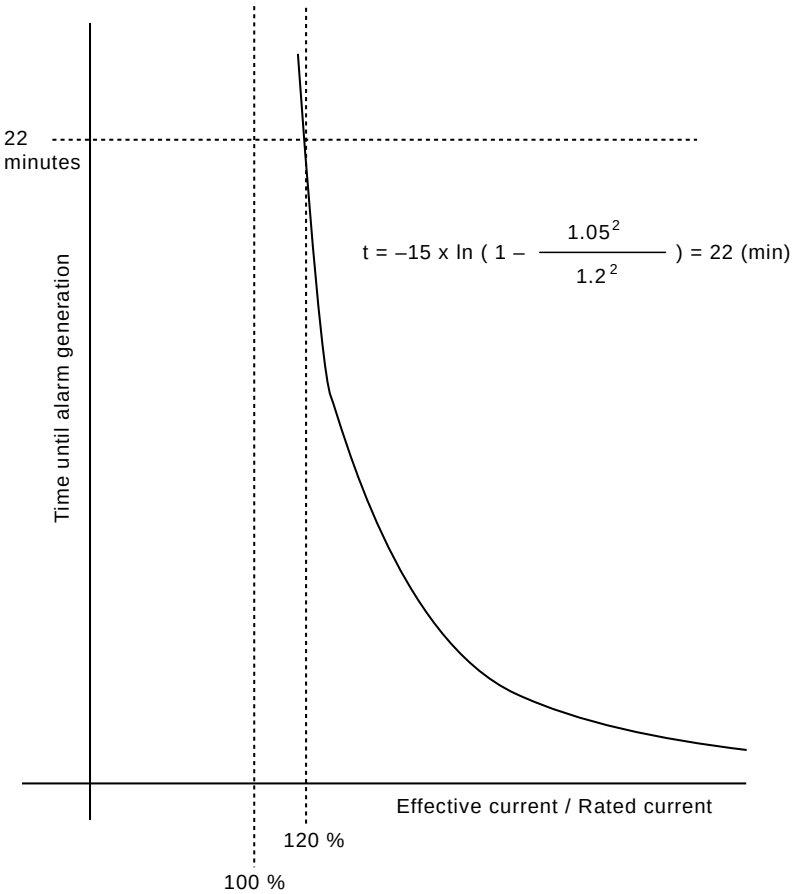

Alarm Code	Section 10

10.1 Alarm Display 2

10.2 Alarm Code Table and Troubleshooting 2

10.3 Troubleshooting of Other Phenomena 11

10.1 Alarm Display

An alarm code is displayed on the display unit when an abnormality occurs.
For the display of option 3 (without HMI) specification, see Para. 4.1.

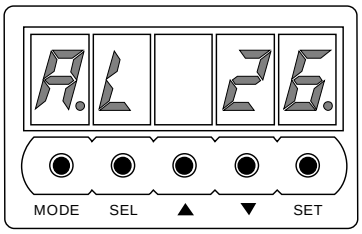

"A.L" indicates an alarm generation and the lower two (2) digits show an alarm code. When an alarm is generated, the dot mark at the lowest of the extreme right column flickers.

When the power is turned on initially, alarm AL26 (parameter setting error) occurs. Specify user parameters UP01 (control mode) and UP02 (motor code), turn the power off once, and make sure that the display is turned off. Then turn the power on again.

10.2 Alarm Code Table and Troubleshooting

If an alarm has occurred, identify and remove the cause of the trouble, then take necessary steps according to the descriptions given in the alarm code table.

How to reset the alarm code:
While an alarm code is displayed, press the SET key provided on the display/operation unit. Or when the reset input signal turns on, the alarm code and flickering dot mark are cleared.
While two (2) or more alarms are generated, each time the SET key is pressed, the alarms are cleared one by one. When the reset input signal is used, all alarms are cleared at once.
When option 3 (without HMI) is selected, see Para. 4.2.

Alarm	Alarm message	Detection	Possible cause and remedy
AL01	Overcurrent OC	IPM of the power supply unit has detected the following error. (When the amplifier size is 008/012P, however, only error [1] or [3] is detected. When the amplifier size is 025/035P or 400P4, only error [1] is detected.) [1] Overcurrent [2] Overheat [3] Gate power drop	[1] The armature wire (U, V, W) is short-circuited. [2] The ambient temperature exceeds 55°C. If the cause does not fall under the above, contact us.
AL02	Overvoltage OV	The DC power (PN voltage) of the main circuit exceeds DC400 V. (For the amplifier size of 400P4, this error occurs when the DC power exceeds DC 800 V.)	[1] The motor speed exceeds the maximum speed. [2] When the motor revolves at a speed exceeding the maximum speed at the time of acceleration, the axis overruns. [3] JP1 or JP2 is disconnected. Or the external reverse-current absorption resistor is not connected or broken. [4] The input power exceeds the prescribed value.
AL03	PN voltage drop PNLV	The DC power (PN voltage) of the main circuit has dropped below DC170 V. (For the amplifier size of 400P4, this error occurs when the DC power has dropped below DC340 V.)	[1] The input power voltage has dropped. [2] Phase T of the input power supply is defective. (When the amplifier size is 035P3 ~ 500P3, 400P4.) [3] If this alarm occurs at motor acceleration, the input power supply capacity may be short.

Alarm	Alarm message	Detection	Possible cause and remedy
AL04	Main power input error ACINF	The input voltage of the main power supply (AC) has dropped.	[1] When the main power is turned on, the electrolytic capacitor is not charged normally. [2] The main power has turned off during the operation.
AL05	Charging resistor overheat CROH	The charging resistor for preventing rush current has overheated. (This error is detected only when the amplifier size is 320P3, 500P3 or 400P4.)	The amplifier is defective. Contact us.
AL06	Resolver cable breakage RELV	The voltage of the resolver signal (between R1 and R2) has dropped to 0.35 V (AC) or less.	Make sure that the resolver cable is not broken. Measure the voltage between R1 and R2. (When the voltage is 0.35 V or over in the AC range, the cable is normal.)
AL07	Power status error POWFAIL	This alarm occurs when the size of the CPU amplifier could not be identified.	[1] The CPU software version is not identical with the unit structure. [2] The amplifier is defective. Contact us.
AL08	Servo amplifier overheat SOH	The temperature of the radiator fin exceeds 90 ~ 100°C.	[1] The temperature in the control panel has risen. [2] The cooling fan incorporated in the amplifier is defective.
AL09	Reverse-current absorption resistor overheat RGOH	Overheating of the reverse-current absorption resistor is calculated by the software and detected.	The number of acceleration/ deceleration counts is large, or continuous absorption (minus "–" load) has been caused. Calculate the reverse-current energy and attach an external reverse-current absorption resistor, or increase the capacity. For the resistance, see Para. 2.4.

Alarm	Alarm message	Detection	Possible cause and remedy
AL10	Reverse-current absorption error RGST	The reverse-current absorption transistor has turned on for more than 100 ms. Note 1: The recommended resistance differs with the amplifier model. For the resistance, see Para. 2.4.	[1] Unless the external resistor is used, make sure that JP1 ~ JP2 on the terminal block is short-circuited. [2] When the external resistor is used, turn the power off and measure the resistance between PA and JP2 on the terminal block. If it is the recommended resistance (Note 1), there is no problem. If it exceeds this value, there is a fear that a wire in the resistor has been broken. When this happens, replace the resistor with a new one.
AL13	Resolver ABS battery voltage drop BLV	The battery voltage has dropped to 3.4 V or less.	Replace the battery. Unless alarm AL24 is generated, the home point remains in the memory.
AL14	Brake fault BERR	[1] Dynamic brake: Though the brake output was ON, the brake confirm signal was not input. [2] Holding brake: Even after the brake output was ON, the brake confirm signal has been input continuously.	Examine the wiring and parts used, referring to the connection of the dynamic brake or holding brake.
AL15	Overcurrent detection OCS	The motor current exceeds 120 % of the current limit value.	[1] The motor was locked mechanically during revolution. [2] Phase U, V or W of the motor is short-circuited. [3] Parameter UP02 (motor selection) was set illegally.

Alarm	Alarm message	Detection	Possible cause and remedy
AL16	Speed amplifier saturation VAS	The speed amplifier saturated and the maximum motor current has flowed for more than three (3) seconds.	[1] The motor was locked mechanically. [2] The load inertia is large and acceleration/ deceleration is sharp. [3] Parameter UP02 (motor selection) was set illegally.
AL17	Motor overload MOL	Rise in temperature of the motor, which was calculated based on real load exceeds 110 %.	[1] The load is too heavy, compared with the motor power. [2] The operation cycle is too short, compared with the motor capacity. [3] Parameter UP02 (motor selection) was set illegally. After removing the cause of the error, make sure that the motor temperature has dropped sufficiently. Then start the operation. If the operation has restarted soon, the motor may be burnt.
AL18	Instant thermal POL	The instant thermal actuates when the output current is 120 % or over of the rated motor current.	[1] The motor was locked mechanically. [2] The load is too heavy, compared with the motor power. [3] Parameter UP02 (motor selection) was set illegally.
AL19	Resolver phase error RESERR	Mis-counting of the resolver feedback counter.	[1] Contact failure of the resolver cable. [2] The resolver cable is near the motor drive cable and effected by noise. Examine the resolver cable. [3] The grounding wire between the motor and amplifier is broken.

Alarm	Alarm message	Detection	Possible cause and remedy
AL20	Overspeed OSPD	The motor speed exceeds 120 % of the maximum speed.	[1] As servo adjustment is not appropriate, the axis overruns. Execute the auto tuning operation. [2] An excessively large command has been specified. [3] Contact failure of the resolver cable. [4] The resolver cable is near the motor drive cable and effected by noise. Examine the resolver cable. [5] The grounding wire between the motor and amplifier is broken.
AL21	Deviation counter over FULL	Position error pulses (i.e., difference between the command value and actual value) of the deviation counter exceed the detection level shown below. Detection level $= \frac{\text{Maximum motor speed}}{60} \times \frac{\text{Sensor split count}}{\text{TP2}} \times 10$ Ex.) Maximum motor speed 2,000 r/min, motor sensor : resolver, target loop gain TP2 = 60: Detection level $= \frac{2000}{60} \times \frac{24000}{60} \times 10$ = 133000 (pulses)	[1] The load is too heavy, compared with the motor power. [2] The load inertia is large and acceleration/ deceleration is sharp. [3] The value of parameter TP02 (target loop gain) is too large. [4] The current limit is too low.
AL22	Resolver ABS phase error ABSE	The ABS sensor has caused a phase shift.	The phase of the ABS sensor should be adjusted, or the sensor should be replaced. Contact us.

Alarm	Alarm message	Detection	Possible cause and remedy
AL23	Resolver ABS breakage ACN	The ABS cable is disconnected. Or the +10, CTD signal cable is broken.	This alarm occurs when the ABS cable is disconnected even during power OFF. After the cable was disconnected to relocate the machine, etc., be sure to perform the absolute setting again.
AL24	ABS battery alarm BAL	The ABS battery voltage has dropped to 3.2 V or less.	Replace the ABS voltage soonest. The home point is not saved in the memory. Perform the absolute setting.
AL25	Option alarm OPALM	An alarm has occurred in the option board.	Contact us.
AL26	Parameter setting error CERR	Parameter UP01 (control mode) or UP02 (motor selection) is not specified, or set illegally.	This alarm occurs when the power is turned on initially. Set the UP01 and UP02 parameters, turn the power off once and make sure that the display unit is turned off also. Then turn the power on again.
		While the SET key is pressed, the cause of the alarm is displayed. For details, see Para. 4.7.	
AL27	Resolver ABS error AEERR	The CHA and CHB signals are turned on compulsively during power ON. They have turned off due to wire breakage, etc.	[1] The ABS cable has broken. [2] Contact failure of the connector. Make sure that the CTD, CHA and CHB signals are connected.
AL28	Link error LINKERR	Communication error with each axis.	Check for the communication state.
AL29	Command value over CONOV	The command value exceeds $\pm 2^{31}$ pulses.	Check for the programming resolution, the number of pulses per programming resolution, etc.
AL30	Present value over ACT.OV	The present value exceeds $\pm 2^{31}$ pulses.	Check for the programming resolution, the number of pulses per programming resolution, etc.

Alarm	Alarm message	Detection	Possible cause and remedy
AL32	Home point no-memory error MZE	[1] Resolver ABS: ABS setting is not executed for the ABS motor. Or this alarm occurs at the same time with alarm AL06, 19, 22, 23 or 27. [2] Encoder: This alarm occurs at the same time with alarm AL42, 43 or 45.	When the ABS motor is selected, alarm AL32 always occurs if the same motor is kept intact. Execute the ABS setting in the following manner. Power ON → Generation of AL23 and 32 → Alarm reset → Power OFF → Power ON → Check of generation of AL32 alone → Alarm reset → ABS setting
AL33	ABS home point invalid CLD	When alarm AL06, 19, 22, 23 or 27 has occurred, perform the ABS setting in the manner shown right. Otherwise, this alarm occurs again.	
AL34	+ Soft limit over SOTP	This alarm occurs if the command causing the axis to overrun the plus "+" soft limit as specified by parameter has been specified. (Effective only while the home point is memorized.)	After the alarm reset, move the axis away from the soft limit by jog feed.
AL35	– Soft limit over SOTM	This alarm occurs if the command causing the axis to overrun the minus "–" soft limit as specified by parameter has been specified. (Effective only while the home point is memorized.)	After the alarm reset, move the axis away from the soft limit by jog feed.
AL36	ABS battery cable breakage ABT	The ABS battery was out of place during power OFF.	Make sure that the battery cable connector is not disconnected, or that the cable is not broken.
AL38	Overrun OVTR	The axis has overrun the stroke end limit in the forward direction.	Reset the alarm, then move the axis away from the limit by jog feed.
AL40	Encoder breakage EREE	The differential signal wire from the encoder has broken.	[1] The encoder cable is broken. [2] Contact failure of the connector.

Alarm	Alarm message	Detection	Possible cause and remedy
AL41	Encoder communication error ETER	Communication with the encoder is not possible.	[1] The encoder cable is broken. [2] Contact failure of the connector.
AL42	Encoder backup error EBACK	The encoder battery voltage has dropped and the absolute coordinate has been lost.	[1] The encoder battery voltage has dropped to 2.5 V or less. [2] The battery cable is disconnected. [3] Contact failure of the encoder cable connector.
AL43	Encoder checksum error ECKER	Checksum error.	This alarm is not detected in the 17-bit serial ABS encoder.
AL44	Encoder battery alarm EBAL	The encoder battery voltage has dropped.	The battery voltage has dropped to 3.1 V or less. Replace the battery.
AL45	Encoder ABS phase error EABSE	Position data error of the encoder has been detected.	If this alarm occurs very often, the encoder is defective. Contact us then.
AL46	Encoder overspeed EOSPD	The encoder has detected the rotation speed of 6,000 r/min. This alarm is detected even during power OFF,	[1] An excessively large command has been specified. [2] Check for the mechanical system.
AL47	Encoder interrupt error EWER	Communication with the encoder is abnormal.	This alarm is not detected in the 17-bit serial ABS encoder.
AL48	Encoder initialize error EINIT	The encoder has detected an initialization error.	This alarm is not detected in the 17-bit serial ABS encoder.
AL49	Sensor phase error PHSERR	Phase error within one (1)-full turn of the sensor has been detected. During the full-closed control mode, if the feedback value of the motor sensor or external linear sensor shifts more than 45° (in terms of the motor axis), this error occurs.	This alarm is not detected in the 17-bit serial ABS encoder.

10.3 Troubleshooting of Other Phenomena

Troubleshooting Relating to Servo Amplifier Operation

Phenomenon	Possible cause	Check	Remedy
The LEDs will not turn on even after power ON.	The power cable is connected incorrectly.	Check for the wiring of the operation power supply (R0, S0).	Connect the power cable correctly.
	The master power voltage has dropped. Or instantaneous power failure has occurred.	Check for the master power voltage.	Set the right power supply. Take necessary measures against power failure.
The servo will not lock.	The PON input signal is not accepted.	Check for the input signal according to Para. 4.7. PON input signal ON/OFF RUN input signal ON/OFF Alarm generation	Input the PON signal. Connect correctly.
	The RUN input signal is not accepted (in control mode 01 ~ 06).		Input the RUN signal. Connect correctly.
	The servo normal (OUT4) signal will not turn on.		Eliminate an alarm generated.
Even if the start signal is input, the motor will not start.	The forward rotation (IN4), reverse rotation (IN3) or rotation permit input is not accepted (in control mode 01 or 03).	Check for the input signal ON/OFF state according to Para. 4.7.	Connect correctly.
	Various signals are not input.	Make sure that the sequence input is not inversed by UP44 and that the special sequence is not selected by UP46.	Set the sequence input legally.
		Check for the connection between the 24 V external power supply with INCOM and OUTCOM.	Connect correctly.
	The motor drive line is broken. The connector almost comes off.	Check the motor drive line for breakage, short-circuit or wrong connection.	Connect correctly. Tighten the connector completely.
	The motor has burnt.	Measure the insulation resistance of the motor.	Replace the motor with a new one.
	The brake is ON.	Check for the brake sequence, wiring and brake master power voltage.	Connect correctly. Set the right power supply.

Phenomenon	Possible cause	Check	Remedy
Even if the start signal is input, the motor will not start.	The speed command, current command or pulse command is not input.	Check for the wiring of the CN2 connector. Check for the pulse command (P, P'), speed command voltage (cf) and current command voltage (cc) on the status display.	Connect correctly. Input each command.
	The control mode is illegal.	Check for the control mode of UP01.	Se the legal control mode.
The revolving direction differs.	The analog command polarity of UP15 is set illegally.	Check for the setting of the analog command polarity.	Set correctly.
	The resolver or encoder is connected incorrectly.	Check for the wiring.	Connect correctly.
The position will shift.	An exclusive encoder or resolver cable is not used.	Check for the encoder or resolver cable.	Replace the cable with an exclusive encoder or resolver cable.
	The coupling connecting the motor shaft and machine system is loosened.	Make sure that the machine system is not loosened.	Review and adjust the machine system.
	The chain or belt is slackened.		
	At home point search, phase Z of the motor sensor is too close to the OFF position near the home point.	Repeat the home point search and make sure that the search finish position will not shift.	Resolver: Specify the home point (or zero point) shift value for UP06. Encoder: Remove the motor from the machine system, shift phase Z by a quarter (1/4) turn, then mount it again.
	Noise is involved in the pulse input signal.	Make sure that FG of the amplifier is connected along the shortest route.	Connect correctly.
The motor stops midway.	The forward rotation (IN4), reverse rotation (IN3) or rotation permit input signal has turned off (in control mode 01 or 03).	Check for the input according to Para. 4.7.	Connect correctly.
	The alarm reset (RSET) has turned on.		

Phenomenon	Possible cause	Check	Remedy
The motor will not stop.	The S-type acceleration/ deceleration time set is extremely long.	Make sure that the time constant for acceleration/ deceleration of UP11 is not long.	Shorten the UP11 set time where possible.
	The inertia is too large.	Make sure that the inertia is not extremely large.	Select the motor capacity suitable for the inertia.
		Make sure that hunting is not caused in the machine system.	• Adjust the gain rather high. • Incorporate a speed reducer in the machine system to stabilize the operation.
The motor starts momentarily, but stops soon.	The setting of the applicable motor (UP02) is illegal.	Check for the content of UP02.	Set the applicable motor (UP02) legally.
	The motor drive cable, or resolver or encoder cable is connected incorrectly.	Check for the connection of the motor drive cable, resolver or encoder cable.	Connect correctly.
Unstable motor revolution	The motor drive cable, or resolver or encoder cable is connected incorrectly.	Check for the connection of the motor drive cable, resolver or encoder cable.	Connect correctly.
	Fluctuation of load torque due to eccentricity of motor shaft coupling, looseness of screws or incorrect meshing of pulleys/gears.	Check for the machine system. Make sure that the motor can revolve stably under no-load condition.	Inspect and adjust the machine system.
	The gain is not appropriate.	Check for the speed and current waveforms by using the waveform display function of SHANX.	Readjust the gain by auto-tuning (Section 6).
The servo amplifier will overheat.	The ambient temperature is high.	Make sure that the ambient temperature of the amplifier is 55°C or less.	Set the ambient temperature of the amplifier to 55°C or less.
	Air flow is blocked.	Make sure that no air flow is blocked.	• Improve ventilation. • Observe the cautions on installation.
	The amplifier is overloaded.	Make sure of the effective load factor (bL) according to Para. 4.6.	• Reduce the load. • Replace the amplifier with another one having a larger capacity.

Phenomenon	Possible cause	Check	Remedy
The servo amplifier will overheat.	The capacity of the reverse-current absorption resistor is small.	Confirm the capacity of the reverse-current absorption resistor.	• Refrain from sudden acceleration or sudden stop motion. • Increase the capacity and replace the resistor with an external resistor.
The motor will overheat.	The ambient temperature is high.	Make sure that the ambient temperature of the motor is 40°C or less.	Set the ambient temperature of the motor to 40°C or less. Cool the motor, using a fan or air conditioner.
	Air flow is blocked.	Make sure that no air flow is blocked.	Improve ventilation.
	The motor is overloaded.	Make sure of the motor electronic thermal value (oL) according to Para. 4.6.	• Reduce the load. • Replace the motor with another one having a larger capacity.
Abnormal noise is caused.	Phase defect or waveform fluctuation of motor cable.	Make sure of the output waveforms (phases U, V and W).	Contact us.
	Adjustment of speed loop gain is not enough.	Check for the speed and current waveforms by using the waveform display function of SHANX.	Readjust the gain by auto-tuning (Section 6).
	Machine vibration.	Make sure that the movable part of the machine is not broken, deformed or loosened due to entry of contaminant.	Correct the nonconformity.
RS232C communication with the personal computer is not possible. Or communication error occurs.	The CN1 signal cable is connected incorrectly.	Check for the cable wiring.	Connect correctly.
	Illegal setting of communication port on the personal computer.	Make sure that the communication port is set correctly.	Set correctly.
	Noise influence.	Make sure that the personal computer is not susceptible to noise influence.	Connect correctly. Disconnect the cable once from the personal computer. Wind the cable around the core (*1) by 2 to 5 turns.

Phenomenon	Possible cause	Check	Remedy
RS232C communication with the personal computer is not possible. Or communication error occurs.	Noise influence.	(*1) Toshiba Machine recommended core FINEMET FT–1KM F/FT–3KM F series (Hitachi Metals-make) Toshiba Machine recommended USB–RS232C transducer • Type: USB–RSAQ3, made by I·O Data • Type: REX–USB60F, made by RATOC Systems	
The motor will not stop completely with 0V input in the speed control mode.	The motor cannot be stopped completely only by specifying 0 V for the speed command (in control mode 01).	Input the special 1 zero command (IN3) of the special sequence (UP46).	• Connect the input signal. • Set the special sequence.
The SHANX will not open. Communication is not possible.	The revision number or type of the OS used in the personal computer is not appropriate.	Check the OS for the revision number and type.	Select the right revision numbered OS or personal computer.
	Data is transferred incorrectly.	Check the communication cable for wiring.	Connect correctly.
VLBus–V communication is not possible (when VLBus–V is used).	The same number is specified repeatedly, or the number is not in regular order.	Make sure of the setting of switches 1 and 2. See Para. 5.7.4.	Set correctly.
	Data transmission cannot be done normally.	Make sure that the wiring is performed correctly and that the connector is inserted completely.	Connect correctly.
		Make sure that the processing time required for communication is set.	Set correctly.
Parameter setting is not possible.	The power is not turned on again.	For the parameter indicated by (POWER OFF), make sure that the power is turned off once and on again.	Turn on the power again.

Specifications	Section 11

11.1 Control Block 2

11.2 Specifications 5

11.3 External View Drawings..... 6

11.1 Control Block

VLASX–008P2/012P2/025P2/035P3/070P3/100P3/200P3

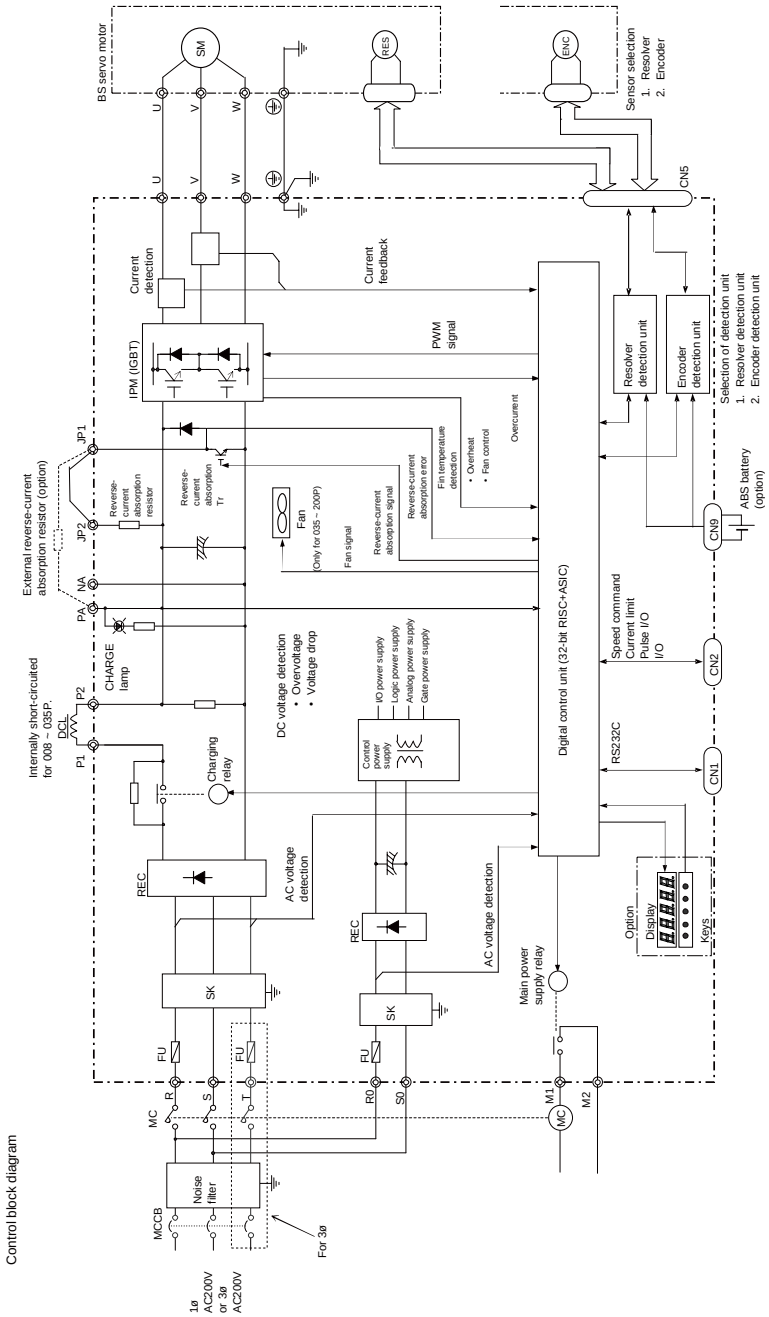

VLASX–320P3/500P3

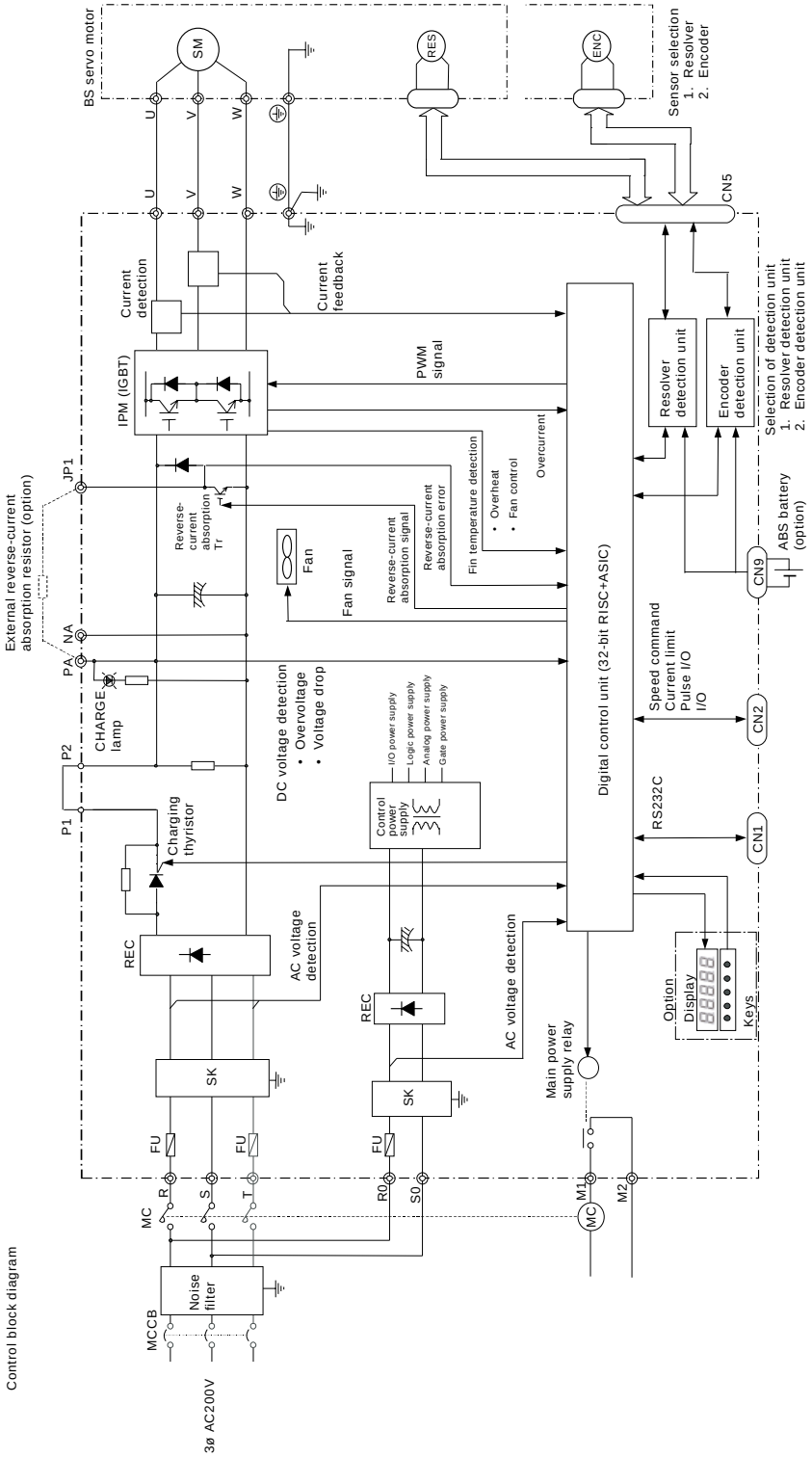

VLASX–400P4

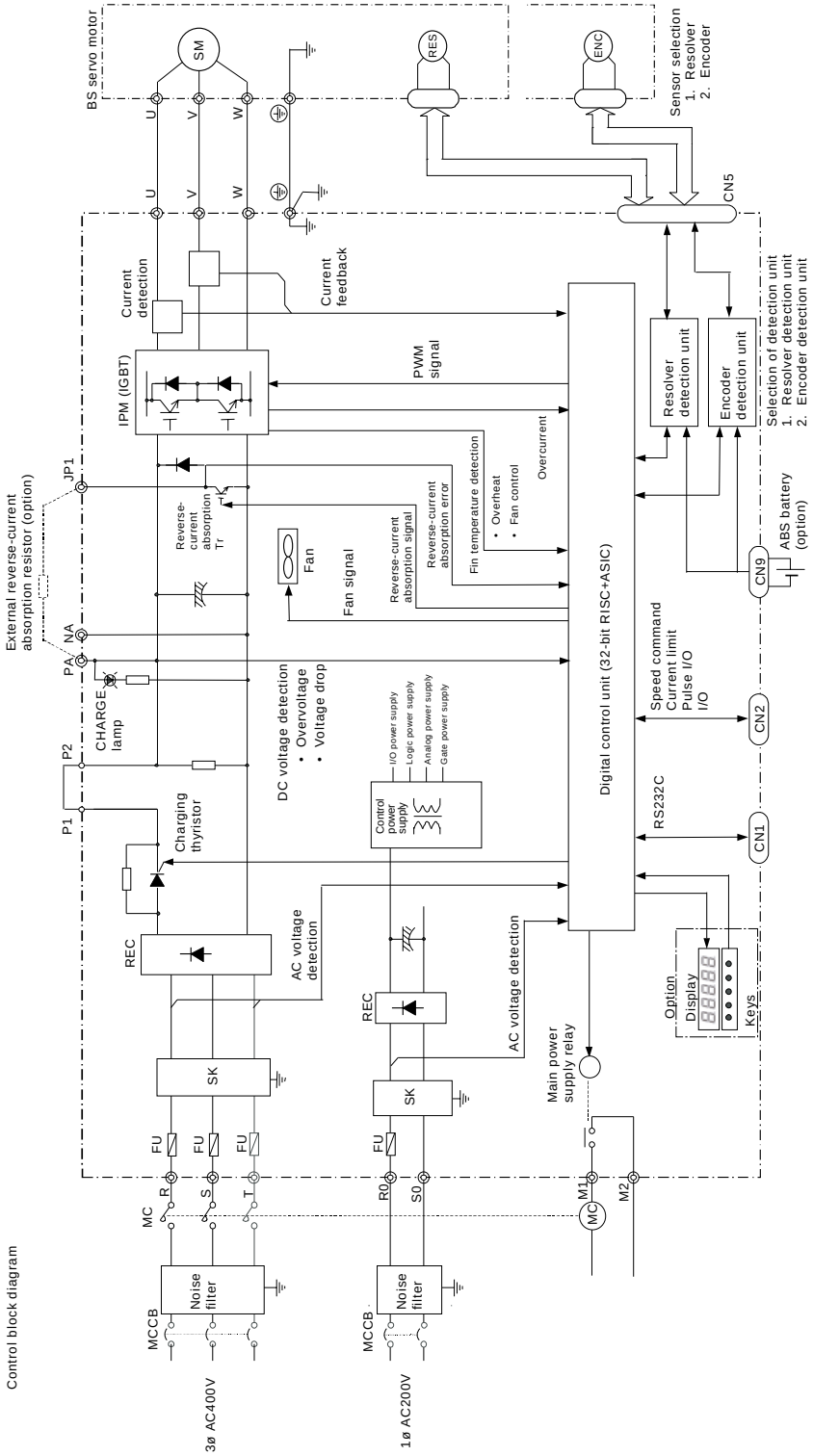
Control block diagram
BS servo motor
SM
U
V
W
RES
ENC
Sensor selection
1. Resolver
2. Encoder
CN5
Current detection
Current feedback
IPM (IGBT)
PWM signal
Resolver detection unit
Encoder detection unit
Selection of detection unit
1. Resolver detection unit
2. Encoder detection unit
External reverse-current absorption resistor (option)
JP1
NA
PA
P2
P1
Reverse-current absorption Tr
Fan
Fan signal
Reverse-current absorption signal
Reverse-current absorption error
Fin temperature detection
• Overheat
• Fan control
Overcurrent
ABS battery (option)
CN9
CHARGE lamp
DC voltage detection
• Overvoltage
• Voltage drop
I/O power supply
Logic power supply
Analog power supply
Gate power supply
Control power supply
Digital control unit (32-bit RISC+ASIC)
Speed command
Current limit
Pulse I/O
I/O
CN2
RS232C
CN1
Charging thyristor
REC
AC voltage detection
Option
Display
Keys
Main power supply relay
SK
FU
R
S
T
R0
S0
M1
M2
MC
Noise filter
MCCB
3ø AC400V
1ø AC200V

11.2 Specifications

Amplifier model		008P2	012P2	025P2	035P3	070P3	100P3	200P3	320P3	500P3	400P4
Control method		PWM 3-phase sine wave									
Main circuit	Master power voltage	Single phase AC200V ~ 230V –15% ~ +10% 50/60Hz			3-phase AC200V ~ 230V –15% ~ +10% 50/60Hz						3-phase (neutral point grounding) AC380V ~ 460V –15% ~ +10% 50/60Hz
	Power supply capacity	250 VA	1.2 kVA	1.7 kVA	2.6 kVA	5.4 kVA	8.0 kVA	18 kVA	35 kVA	59 kVA	83 KVA
Control circuit	Master power voltage	Single phase AC200V ~ 230V –15% ~ +10% 50/60Hz			Single phase AC200V ~ 230V –15% ~ +10% 50/60Hz						
	Power supply capacity	50 VA	50 VA	50 VA	65 VA	80 VA	80 VA	100 VA	150 VA	150 VA	350 VA
Max. applicable motor		200 W	500 W	1 kW	1.5 kW	3.4 kW	5.0 kW	11 kW	20 kW	33 kW	55 kW
Continuous output current		2.2 A(rms)	3.4 A(rms)	5.7 A(rms)	8.3 A(rms)	18.4 A(rms)	28.3 A(rms)	56.6 A(rms)	99A (rms)	166A (rms)	134 A (rms)
Momentary max. current		5.7 A(rms)	8.5 A(rms)	17.7 A(rms)	25.0 A(rms)	49.5 A(rms)	71.0 A(rms)	141 A(rms)	226 A(rms)	353 A(rms)	283 A(rms)
Speed/Position detector		Resolver or 17-bit serial encoder (Both resolver and encoder are available with ABS.)									
Speed control range		1:5000 (Ratio between the minimum speed that outputs motor rated current and the rated speed)									
Rate of speed fluctuation		±0.02 % or less under load of 0 ~ 100 % or power supply range –5 ~ 10 %, and ±0.2 % or less at temperature of 0 ~ 55°C.									
Heat loss	Main circuit	15 W	22 W	39 W	58 W	98 W	178 W	310 W	720 W	1200 W	1900 W
	Control circuit	20 W	20 W	20 W	26 W	32 W	32 W	40 W	50 W	50 W	140 W
Reverse-current absorption resistor capacity		20 W	20 W	30 W	60 W	80 W	100 W	180 W	As per the capacity of external resistor		
Mass (standard)		1.3 kg	1.3 kg	2.3 kg	2.4 kg	4.5 kg	7 kg	12 kg	31 kg	63 kg	120 kg
Outer dimensions (W×H×D)		65*170*150	65*170*150	110*170*180	110*170*180	110*250*180	130*307*197	220*410*230	350*500*315	585*500*353	670*710*410
General-purpose input		DC24 V, 6 mA, 8 numbers (for speed control: Run, reset, MB check, forward rotation permit, reverse rotation permit, present value clear, home point stop, PON input) Both sink (minus common) and source (plus common) connections are possible.									
General-purpose output		DC24 V, 50 mA, 5 numbers (for speed control: Servo normal, servo ready, stop detection, warning, MB output) Both sink (minus common) and source (plus common) connections are possible.									
Speed, current control	Speed command	DC0 ~ ±10 V; maximum motor speed at ±10 V (ratio setting allowed), input resistance 49 kΩ, AD resolution 12-bit (speed limit for current control mode)									
	Current limit	DC0 ~ ±10 V; maximum motor torque at ±10 V (ratio setting allowed), input resistance 49 kΩ, AD resolution 12-bit (current command for current control mode)									
Position control	Split count	Resolver: 24,000 P/rev, Encoder: 131,072 P/rev (Travel distance per 1 pulse can be set with 65535/65535.)									
	Command type	Forward/reverse rotation pulse (phase A/B, forward/reverse rotation signal/feed pulse), DC3.5 V ~ 5.5 V 11 mA photo coupler, frequency 500 kHz (max.)									
Pulse output	Split count	Resolver: 24,000 P/rev, Encoder: 131,072 P/rev (Travel distance per 1 pulse can be set with 65535/65535.)									
	Output mode	Phase A/B pulse (forward/reverse rotation pulse), Vout: 3 V (typ) 20 mA (max.) output equivalent to AM2LS31, frequency 500 kHz (max.)									
Acceleration/ deceleration	Soft start	Linear acceleration/deceleration time can be set separately for the speed command. Linear acceleration/deceleration in the range of 0.000 ~ 65.535 seconds in 0.001 second intervals.									
	S-type acceleration/ deceleration	S-type acceleration/deceleration time can be set for the speed command or pulse command. S-type acceleration/deceleration in the range of 0.000 ~ 65.535 seconds in 0.001 second intervals.									
Monitor function	Monitor output	Speed or current monitor, 0 ~ ±10 V, output resistance 330 Ω (short-circuited), DA resolution 12-bit (option)									
	Display unit	Five (5)-digit LED (Various data monitor, check, adjustment and parameter setting are possible.) (option)									
	External display	DPA–80 (option) can be connected for monitoring speed, current, present value and electronic thermal value.									
Auto-tuning function		Automatic gain setting by repeated tuning operation.									
Protective function		Overcurrent, overvoltage, voltage drop, motor overload (electronic thermal, instant thermal), fin overheat, reverse-current resistor overload, resolver cable breakage, encoder cable breakage, etc.									
General spec.	Operating condition	Temperature: 0 ~ 55°C (non-freezing), humidity: 10 ~ 90 %RH (non-condensing) Atmosphere: No dirt or dust, metal powder or corrosive gas is involved.									
	Vibration resistance (*1)	Pursuant to IEC60068–2–6. Frequency: 10 ~ 57 Hz, one-way amplitude: 0.75 mm Frequency: 57 ~ 150 Hz, acceleration: 9.8 m/s^2							–		
	Storage ambient conditions	Temperature:–10 ~ 70°C (non-freezing), humidity: 10 ~ 90 %RH (non-condensing) Atmosphere: No dirt or dust, metal powder or corrosive gas is involved.									
	Protective structure	IP10									
	Overvoltage class	Category II									
	Protective insulation	All interfaces (CN1, CN2, CN5, CN9) are protected by insulation from the primary power supply.									

(*1): Normal operation of the amplifier under these conditions is already verified.

11.3 External View Drawings

VLASX–008P2/012P2

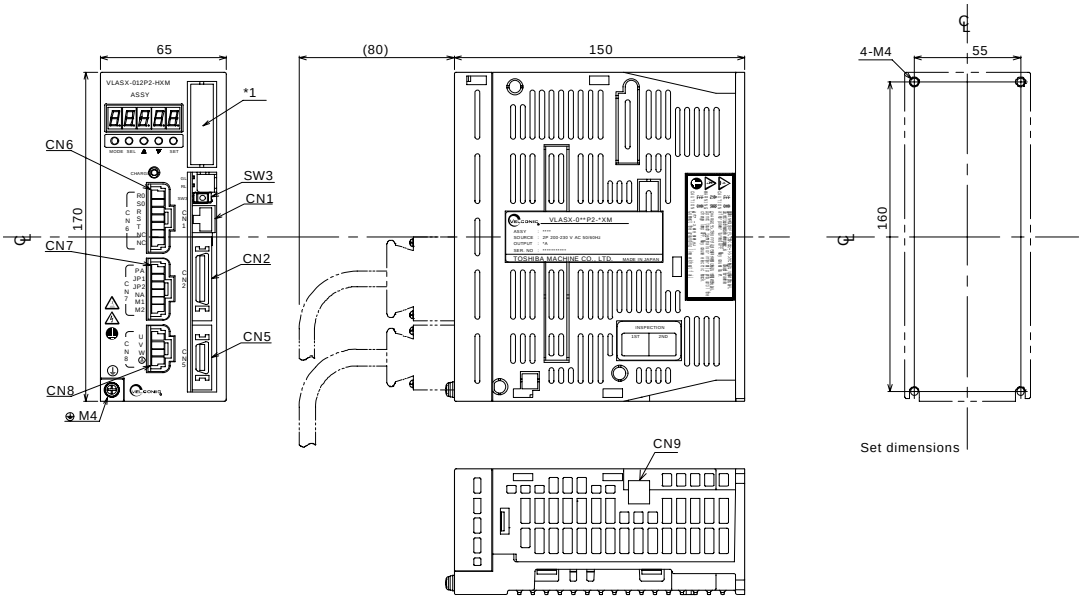

VLASX–025P2

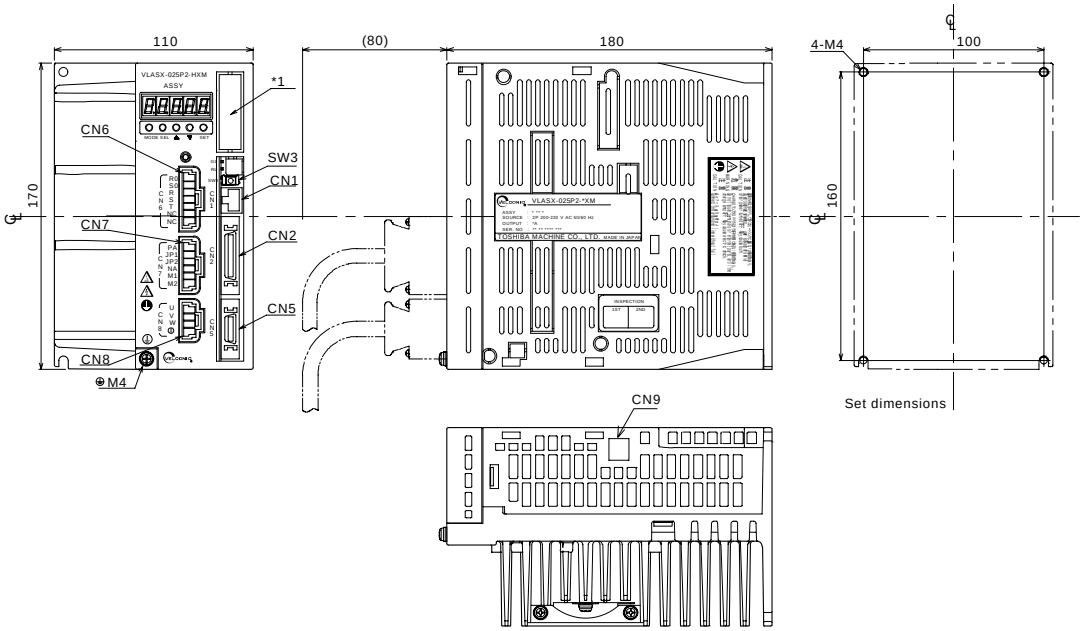

VLASX–035P3

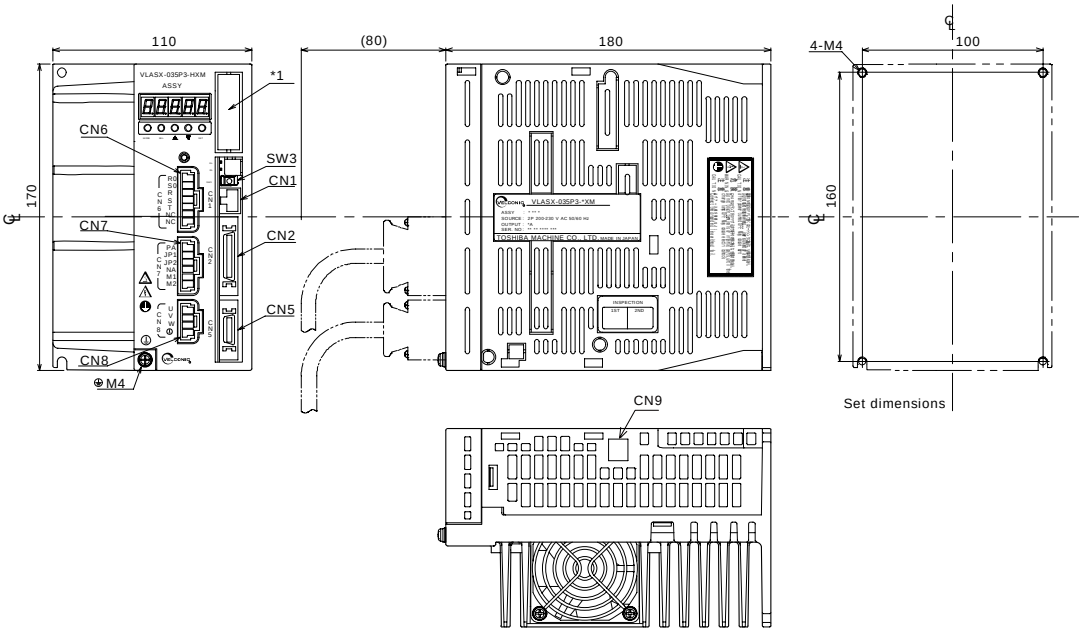

VLASX–070P3

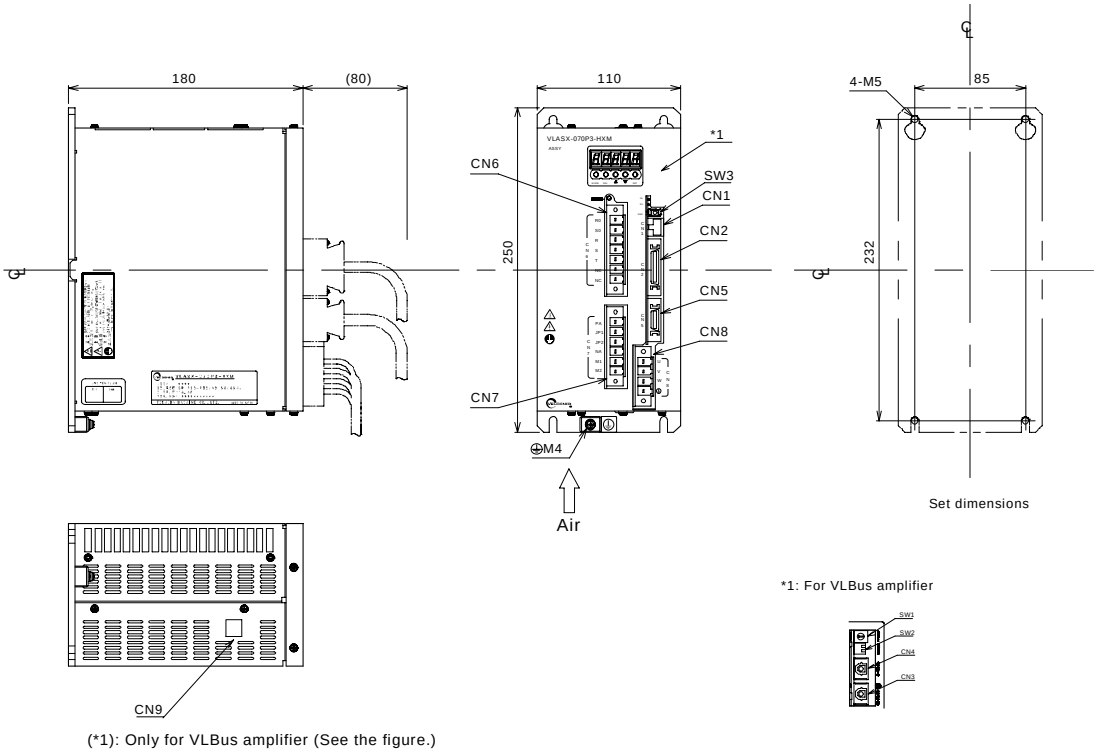

(*1): Only for VLBus amplifier (See the figure.)

VLASX–100P3

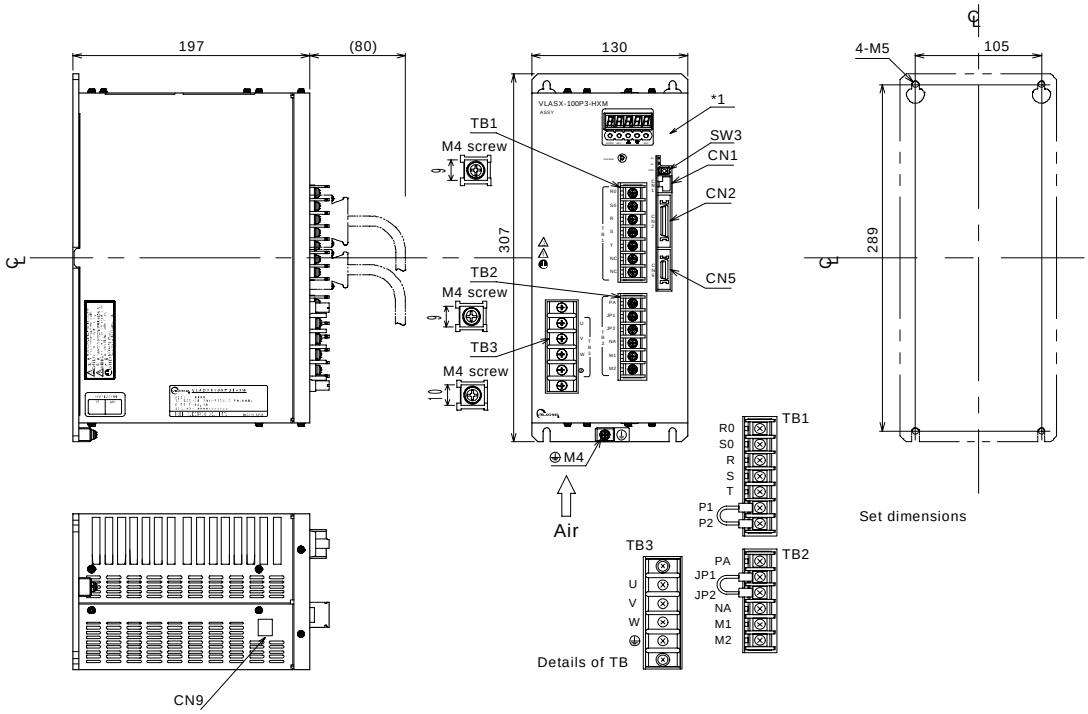
197
(80)
130
4-M5
105
VLASX-100P3-HXM
*1
TB1
M4 screw
SW3
CN1
CN2
307
289
TB2
CN5
TB3
M4
Air
R0
S0
R
S
T
P1
P2
Set dimensions
PA
JP1
JP2
NA
M1
M2
U
V
W
Details of TB
CN9

VLASX–200P3

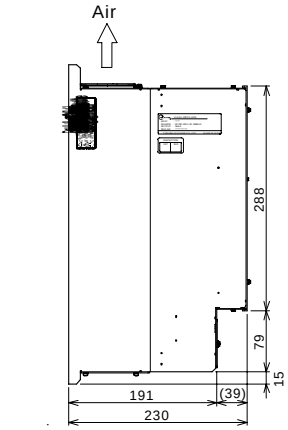

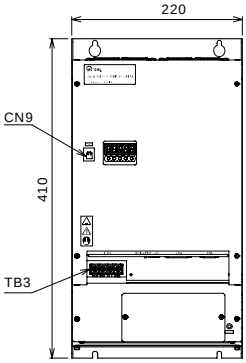

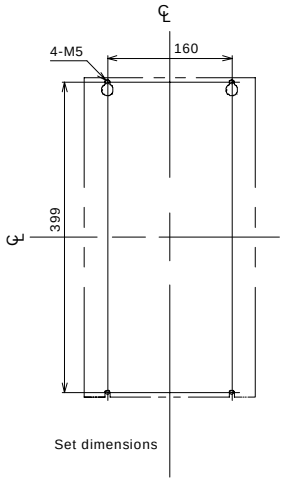

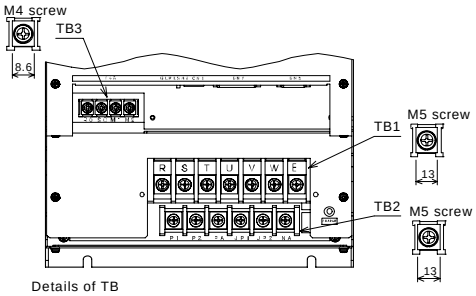

Details of TB

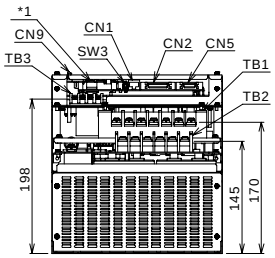

(*1): For 100P

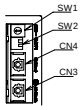

For 200, 300, 500P

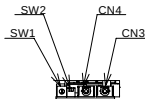

(*1): Only for VLBus amplifier (See the figure.)

VLASX–320P3

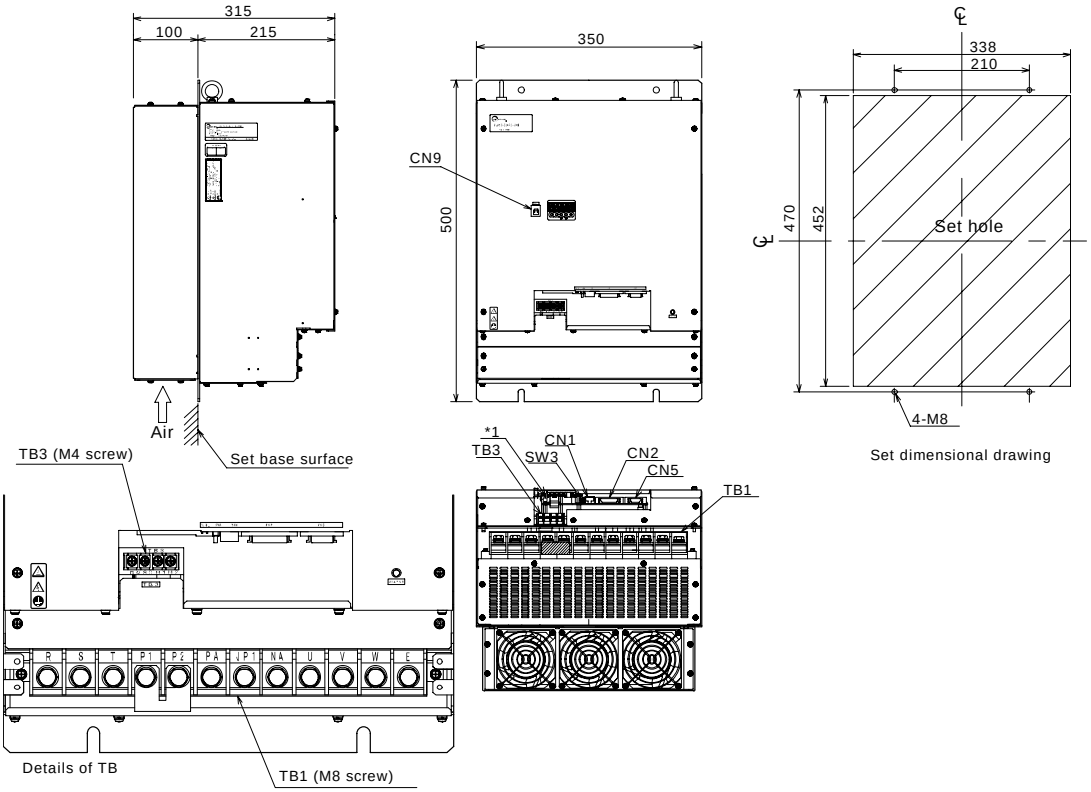
315
100
215
350
CN9
500
338
210
470
452
Set hole
4-M8
Set dimensional drawing
Air
Set base surface
TB3 (M4 screw)
*1
TB3
SW3
CN1
CN2
CN5
TB1
R
S
T
P1
P2
PA
JP1
NA
U
V
W
E
Details of TB
TB1 (M8 screw)

VLASX–500P3

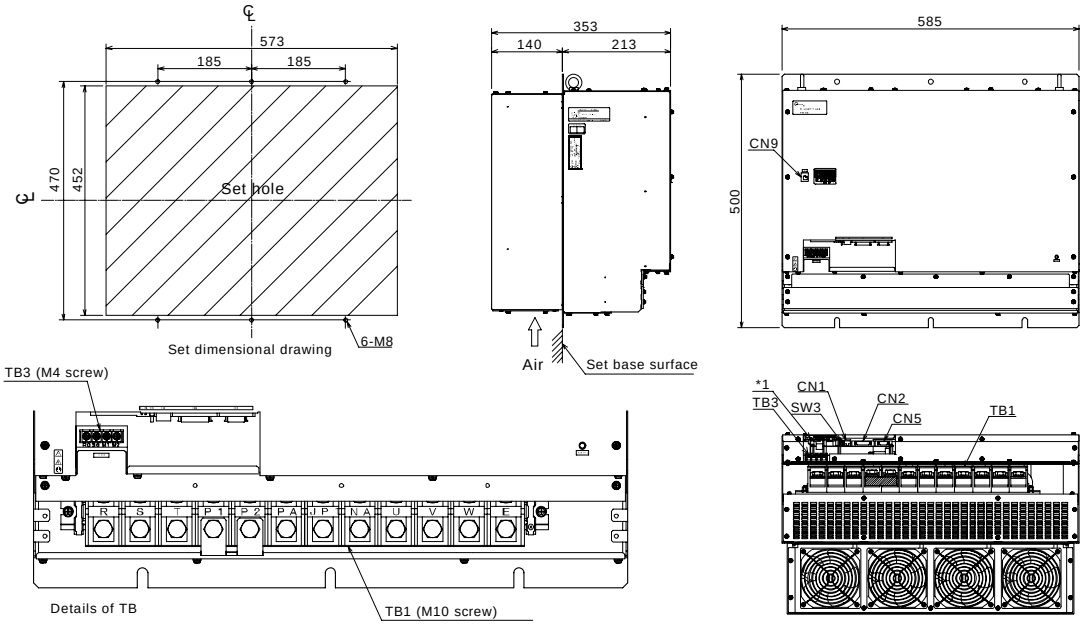
573
185
185
470
452
Set hole
6-M8
Set dimensional drawing
353
140
213
Air
Set base surface
585
CN9
500
TB3 (M4 screw)
R
S
T
P1
P2
PA
P
NA
U
V
W
E
Details of TB
TB1 (M10 screw)
*1
CN1
TB3
SW3
CN2
CN5
TB1

VLASX–400P4

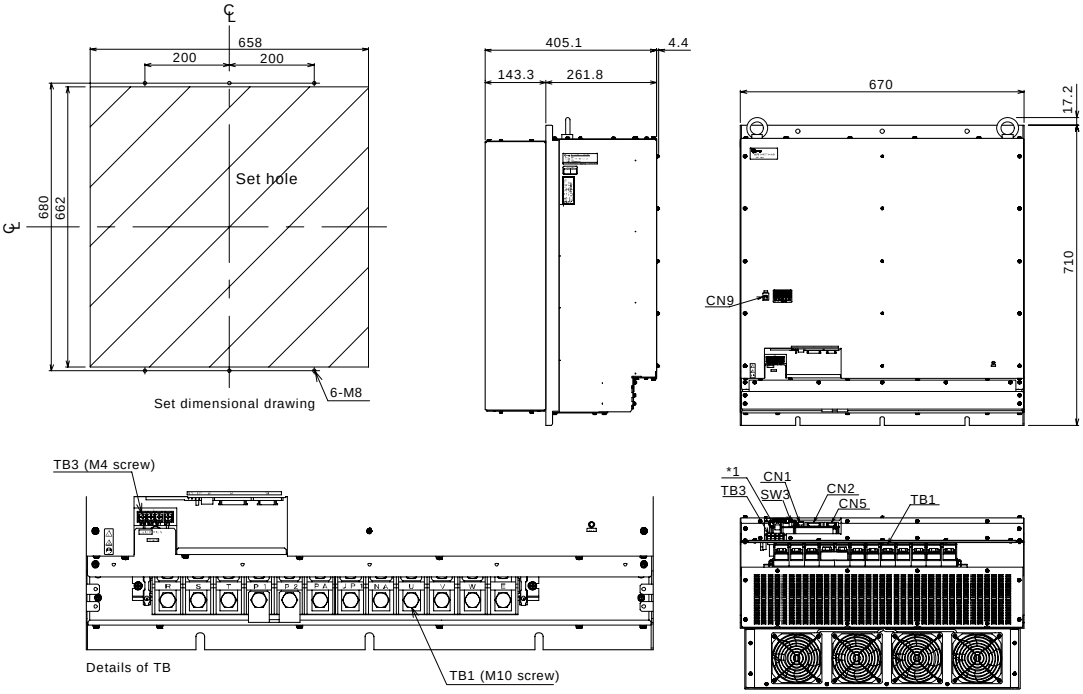

(*1): Only for VLBus amplifier (See the figure.)

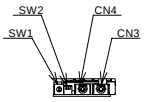

Appendix	Appendix

Structure of Engineering Handbook

This handbook refers to the operation of X series servo amplifiers VLASX–008P through 500P (including 400P4). The circuit structure shown in the block diagram in Section 11 is common to all models. In this handbook, the main circuit and signal circuit are described separately. For the motor sensor, both resolver type and 17-bit serial encoder type are described. Take care not to confuse them.

Use properly to assure safety. Be sure to read through this manual before operation.	Cautions on Safety Meaning of terms and labeling, general items, transportation, installation, wiring, operation and handling, inspection and maintenance, and disposal.
Firstly, confirm the contents. Set the motor code and control mode.	Introduction Unpacking, name of each part, combinations of motor and amplifier
Before designing control panel and wiring	Section 1 Installation Installation and environmental conditions
	Section 2 Power Circuit Main circuit wiring, brake circuit, and reverse-current absorption resistance
	Section 3 Signal Circuit Analog I/O, pulse I/O, monitor output and motor sensor input
Get familiar with key operation.	Section 4 Display/Operation Unit and Display Details Key operation, and operation and details of each area
	Section 6 Auto-Tuning For the auto-tuning parameters and adjustment flow operation, see Section 4.

The I/O signals and parameters differ with each mode.	Section 5 Operation Guide Speed control mode Current control mode Position control mode Speed, current and position control modes Direct feed mode Draw control mode NCBOY mode
How to operate ABS and peripheral equipment	Section 7 Absolute Position Detection System (ABS) Configuration, specifications, wiring and output timing
	Section 8 Peripheral Equipment Display unit, brake power supply, ABS battery, external reverse-current absorption resistor, noise filer, ACL/DCL, cable, connector, plug, etc.
Fully understand the amplifier and motor characteristics.	Section 9 Characteristics Short-time overload, electronic thermal and dynamic brake characteristics
	Section 11 Specifications Control block diagram, specifications and external view drawings
When you are in trouble	Section 10 Alarm Code Alarm code display list and troubleshooting

Trouble Reporting Card

■Contacts:

● TOKYO MAIN BRANCH
2-2-2 Fukoku Seimei Build., Uchisaiwai-cho, Chiyoda-ku, Tokyo 100-8503,Japan TEL +81-3-3509-0270 FAX +81-3-3509-0335

● NUMAZU HEADQUARTERS
2068-3, Ooka, Numazu-shi, Shizuoka-ken 410-8510, Japan TEL +81-55-926-5032 FAX +81-55-925-6527

● KANSAI BRANCH
1-12-39 Sin-Hankyu Build.,Umeda, Kita-ku, Osaka-shi, Osaka 530-0001, Japan TEL +81-6-6341-6181 FAX +81-6-6345-2738

● CHUBU BRANCH
5-307, Kamiyashiro, Meito-ku, Nagoya-shi, Aichi-ken 465-0025, Japan TEL +81-52-702-7660 FAX +81-52-702-1141

● TOEI ELECTRIC SERVICE CENTER
131, Matsumoto, Mishima-shi. Shizuoka-ken 411-8510, Japan TEL +81-55-977-0129 FAX +81-55-977-3744

Customer's contact	Company name	
	Division/Department	
	Contact person	
	TEL	FAX
Motor model	VLBS□-□□□□□□□□-□□□□	
Motor serial number		
Model of combined servo amplifier	VL□□X-□□□P□-□□□	
Amplifier serial number		
Amplifier ASSY number		
Operating condition	During installation Run years: ___ years (___ hours run/day)	
Phenomena of nonconformity	Will not start/Unstable rotation/Uncontrollable/Overheat / Abnormal noise and nasty smell/Others	
Alarm generated	A.L	
Details of nonconformity	What was caused with what operation?	

BS Amplifier VLASX Engineering Handbook

Standard Amplifier Edition 1

TOSHIBA MACHINE CO., LTD.

Place of business

●TOKYO MAIN BRANCH TEL +81-3-3509-0270 FAX +81-3-3509-0335
2-2-2 Fukoku Seimei Build., Uchisaiwai-cho, Chiyoda-ku, Tokyo 100-8503, Japan

●NUMAZU HEADQUARTERS TEL +81-55-926-5032 FAX +81-55-925-6527
2068-3, Ooka, Numazu-shi, Shizuoka-ken 410-8510, Japan

●KANSAI BRANCH TEL +81-6-6341-6181 FAX +81-6-6345-2738
1-12-39 Sin-Hankyu Build.,Umeda, Kita-ku, Osaka-shi, Osaka 530-0001, Japan

●CHUBU BRANCH TEL +81-52-702-7660 FAX +81-52-702-1141
5-307, Kamiyashiro, Meito-ku, Nagoya-shi, Aichi-ken 465-0025, Japan

Service Center

●TOEI ELECTRIC SERVICE CENTER TEL +81-55-977-0129 FAX +81-55-977-3744
131, Matsumoto, Mishima-shi. Shizuoka-ken 411-8510, Japan

Export of the product listed in this manual:

1. The final user or final application of this product may be subject to export restriction as defined by the Foreign Exchange and Foreign Trade Control Law of Japan. If it is to be exported, it shall undergo full screening and pass the required export procedures.
2. When this product is incorporated in another equipment, the customer may be required to apply for the export permission, depending on the application of the another equipment.

T-Z50235E02-080601